Brought to you by Pro Gear & Transmission.

For parts or service call:

877-776-4600
407-872-1901

www.globaldifferentialsupply.com

906 W. Gore St. Orlando, FL 32805
parts@eprogear.com

Spicer® TPCS (Tire Pressure Control System)

Roadranger® More time on the road®

Service Manual

AXSM0010

January 2007

The description and specifications contained in this service publication are current at the time of printing.

Eaton Corporation reserves the right to discontinue or modify its models and/or procedures and to change specifications at any time without notice.

Any reference to brand name in this publication is made as an example of the types of tools and materials recommended for use and should not be considered an endorsement. Equivalents may be used.

IMPORTANT NOTICE

This symbol is used throughout this manual to call attention to procedures where carelessness or failure to follow specific instructions may result in personal injury and/or component damage.

Departure from the instructions, choice of tools, materials and recommended parts mentioned in this publication may jeopardize the personal safety of the service technician or vehicle operator.

WARNINGS: Failure to follow indicated procedures creates a high risk of personal injury to the servicing technician.

CAUTION: Failure to follow indicated procedures may cause component damage or malfunction.

NOTE: Additional service information not covered in the service procedures.

Tip: Helpful removal and installation procedures to aid in the service of this unit.

Always use genuine Eaton replacement parts.

Every effort has been made to ensure the accuracy of all information in this guide. **However, Eaton Axle and Brake Division makes no expressed or implied warranty or representation based on the enclosed information.**

Any errors or omissions may be reported to:
Technical Publications, Eaton Corporation, P.O. Box 4013, Kalamazoo, MI. 49003

Section 1: Introduction

Tire Pressure Control System 7
Purpose and Scope of Manual 7
Organization of Manual 7

Section 2: Operation

Component Description 8
System Operation 10
Air Seal Life 10

Section 3: Electrical Service

Terminal, Connector and Wire Service 13
Splicing Wire 14
Speed Sensor Repair/Replacement 15
Wiring Connections 16
Configuration Connector 16
Relay and Power Connections 16
Vehicle Grounds 16
Lamp Switch 16
Electronic Control Unit Replacement 17
Operator Control Panel Replacement 17
Operator Control Panel Back Lamp Removal 17
Pressure Transducer 17

Section 4: Pneumatic Service

Service Guidelines 18
Pneumatic Control Unit Replacement 21
Pressure Switch 22
Steer Axle Pneumatic Replacement 24
Drive Axle Pneumatic Replacement 26
Trailer Axle Pneumatic Replacement 28
Wheel Valve Air Filter Change 31

Section 5: Non-Drive Axle Wheel End Service

Preparation 32
Wheel End Air Line Removal 32
Wheel Removal 32
Hubcap Removal 34
Hub Service 34
Inlet Tube Removal (Steer Axles Only) 34
Inlet Tube Installation 35
Spindle Adapter Removal (Trailer Axles Only) 35
Internal Air Line Installation (Trailer Axles Only) 36
Rotary Joint, Nested Hubcap Installation 37
Wheel and Wheel Valve 37
Wheel Changing Procedure 39
Wheel Installation 39

Section 6: Drive Axle Wheel End Service

Preparation 40
Wheel and Wheel Valve Removal 40
Hub, Oil Seal And Air Seal Removal 40
Wheel End Disassembly 40
Sleeve Removal 41
Sleeve Installation 42
Install Drive Axle Inlet Tube 44
Retightening Sequence 44
Air Seal Installation 44
Oil Seal Installation 45
Wheel Hub Installation 45
Wheel and Wheel Valve 48

Section 7: System Setup and Checkout

Introduction 50
System Setup 50

Section 8: Operator Controls

Introduction 51
Fault Codes 52
Tire Pressure Control System Programming 55
Programming Quick Reference Chart 57

List of Illustrations

Figure 1 Tire Pressure Control System Component Identification 9
Figure 2 Tire Pressure Control System Simplified Schematic 11
Figure 3 Wiring Harness Diagram 12
Figure 4 Replacing Terminals 13
Figure 5 Splicing Wire 14
Figure 6 Speed Sensors 15
Figure 7 Terminal Connections 16
Figure 8 Overview of Tractor Air Line Routing 19
Figure 9 Hose/Configuration Requirements 20
Figure 10 Pneumatic Control Unit and Pneumatic Layout 21
Figure 11 Routing for Wet Tank Pneumatics 23
Figure 12 Steer Axle Air Line Routing 25
Figure 13 Branch Tee Axle Mounting 26
Figure 14 Drive Axle Air Line Routing 27
Figure 15 Overview of Trailer Air Line Routing 28
Figure 16 Trailer Axle Pneumatics 30
Figure 17 Air Filter Change 31
Figure 18 Run Tee 32
Figure 19 Non-Drive (Steer) Axle Wheel Air Line Routing – Rotary Joint Configuration 33
Figure 20 Non-Drive Hubcap Installation – Rotary Joint Configuration 34
Figure 20A Inlet Tube Installation (Steer) 35
Figure 21 Axle End Air Line Routing 36
Figure 22 Proper Hose Position 37
Figure 23 Add Lube Position and Check 37
Figure 24 Run Tee 38
Figure 25 Drive Wheel Air Line Routing 39
Figure 26 Axle Shaft Removal 40
Figure 27 Wheel Hub Removal 41
Figure 28 Spindle Sleeve Depth Measurement 42
Figure 29 Sleeve Inner O-Ring Installation 42
Figure 30 Spindle Preparation 43
Figure 31 Spindle O-Ring and Backup Ring 43
Figure 32 Preparation for Sleeve Installation 43
Figure 33 Wheel Hub Preparation for Installation 44
Figure 34 Wheel Hub Installation 45
Figure 35 Adjusting Nut Identification 46
Figure 36 Sleeve O-Ring Leak Test 46
Figure 37 Run Tee 48
Figure 38 Drive Axle Wheel Air Line Routing 49
Figure 39 Operator Control Panel 51
Figure 40 Entering the Programming Sequence 56
Figure 41 Entering the Programming Sequence Chart 57
Figure 42 Fastener Torques 58

Tire Pressure Control System

Eaton's Tire Pressure Control System features dashboard control of tire air pressure through:

- Simple push button operation.
- Independent Steer, Drive, and Trailer operation.
- Electronic braking priority for air system.
- Vehicle speed sensing and response capability.
- Self-diagnostics.

Purpose and Scope of Manual

This manual explains how to make repairs to the Eaton Tire Pressure Control System. While this manual also includes a basic summary of system components and control operation, it does not provide all information necessary to fully support an installed Tire Pressure Control System. For information on troubleshooting, installation and full system operation, request appropriate documents from your Eaton representative.

- Installation Guide
- Operator's Guide
- Illustrated Parts List
- Troubleshooting Guide

Organization of Manual

The following is an overview:

Section 1: Introduction. Describes the purpose, scope, and organization of this manual as well as introduces the Tire Pressure Control System.

Section 2: Operation. Reviews the components that make up the Tire Pressure Control System as well as gives a simplified scenario of how the Tire Pressure Control System functions.

Section 3: Electrical Service. Covers the Service procedures for the electrical components of the Tire Pressure Control System.

Section 4: Pneumatic Service. Covers the Service procedures for the pneumatic components of the Tire Pressure Control System.

Sections 5: Non-Drive Axle Wheel End Service. Covers the Service procedures for the Steer and Trailer Axle wheel components of the Tire Pressure Control System.

Section 6: Drive Axle Wheel End Service. Covers the Service procedures for the drive axle wheel components of the Tire Pressure Control System.

Section 7: System Setup and Checkout. Covers how to check the system after servicing the Tire Pressure Control System.

Section 8: Operator Controls. Describes how to operate the system with the Operator Control Panel Component Description.

Component Description

The following describes how each component of the Tire Pressure Control System functions. Figure 1 shows the approximate location of each component.

Wheel Valve

All axles under tire pressure control incorporate a wheel valve at each wheel end. Dual wheels are typically connected to one wheel valve at the outer wheel to provide tire pressure balance. When the system is idle, the wheel valve isolates the tire(s) from the system, thereby extending seal life since the seals are not under constant pressure. The valve also ensures fail safe operation should the system become disabled or inoperable. The wheel valve provides for inflation of the tires from the vehicle air supply via the pneumatic controller, and deflation of the tires upon system demand.

Electronic Control Unit (ECU)

The Electronic Control Unit is the control center for the entire Tire Pressure Control System. The Electronic Control Unit receives commands from the driver through the Operator Control Panel and transmits appropriate signals throughout the system. The Electronic Control Unit is typically mounted in the cab behind the passenger seat near the Pneumatic Control Unit.

Operator Control Panel (OCP)

By using the Operator Control Panel keys, the operator selects tire pressures for the conditions encountered. The panel also displays such system parameters as current tire pressures, selected modes, and system status. The Operator Control Panel is typically mounted on the dash within view and reach of the driver.

Pneumatic Control Unit (PCU)

The Pneumatic Control Unit is a solenoid controlled manifold that receives commands from the Electronic Control Unit and controls the air system. It also contains the pressure transducer which transmits the pressure readings to the Electronic Control Unit. The Pneumatic Control Unit delivers the proper control signal to the appropriate channel (steer/drive/trailer).

Speed Sensor

The speed sensor provides the Electronic Control Unit with vehicle speed information. If the vehicle speed is above programmed limits, the system will display an overspeed indication on the Operator Control Panel. Continued operation in this condition will cause the system to automatically inflate the tires to a more appropriate pressure.

Pressure Switch

The pressure switch acts as an electronic brake priority switch. It prevents the Tire Pressure Control System from consuming air from the wet tank until the brake system is fully charged. This prevents the Tire Pressure Control System from allowing the primary and secondary tanks to go below recommended operating pressures for braking.

Air Lines

The Tire Pressure Control System uses a dedicated pneumatic system plumbed from the vehicle's existing wet tank.

Wiring

All electric cables and connectors are supplied in an integrated harness.

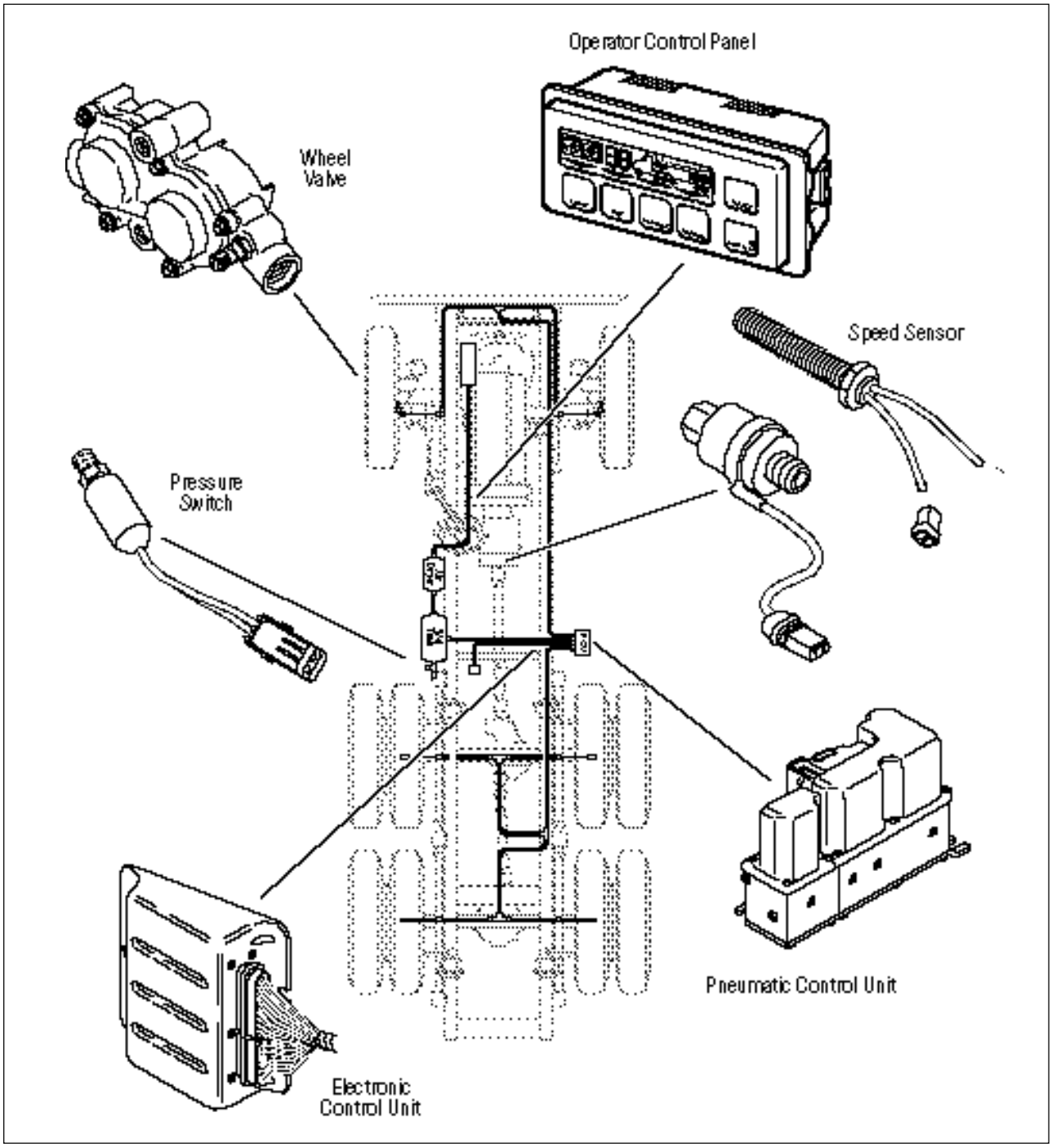

Figure 1 Tire Pressure Control System Component Identification

System Operation

A vehicle equipped with the Tire Pressure Control System will seem to operate the same as a vehicle without the Tire Pressure Control System, however, there are some differences:

- During normal operation, the Electronic Control Unit will check tire pressures every 15 minutes to make sure that pressures are maintained at selected settings.
- Immediately after a pressure change, the pressure is rechecked after approximately 30 seconds.
- During the run flat mode, tire pressures are checked at an increased rate.

During all of the above checks, solenoid clicking and air exhausting from the Pressure Control Unit may be heard.

The following is a description of how the Tire Pressure Control System functions. Figure 2 shows a simplified schematic of how the components of the system relate to one another.

Pressure Regulation

The Tire Pressure Control System regulates tire pressures through a series of electro-pneumatic controls that supply air to each wheel end through wheel valves. The driver operates a dash-mounted, graphic-control panel (the Operator Control Panel) which commands the system to adjust tire pressure.

Pressure Mode

The driver selects a desired tire pressure mode by pressing buttons on the Operator Control Panel. The system responds by adjusting tire pressures to match the road surface and load. Indicators on the Operator Control Panel inform the driver of functions currently being performed.

Operator Control Panel

The Operator Control Panel also contains a built-in indicator to warn drivers when they are travelling too fast for selected tire pressures. If the vehicle's speed is not reduced, the Tire Pressure Control System will automatically select the appropriate pressure. Additionally, a warning icon will inform the driver to stop and check the tires if the system senses conditions that may indicate tire damage.

Air Seal Life

When the Tire Pressure Control System is idle, not inflating, deflating or checking pressure, all tire air pressures are isolated from the Tire Pressure Control System. Tire pressure isolation extends seal life because the seals are not under continuous pressure. Isolation also provides fail-safe operation of the vehicle if the Tire Pressure Control System is disabled.

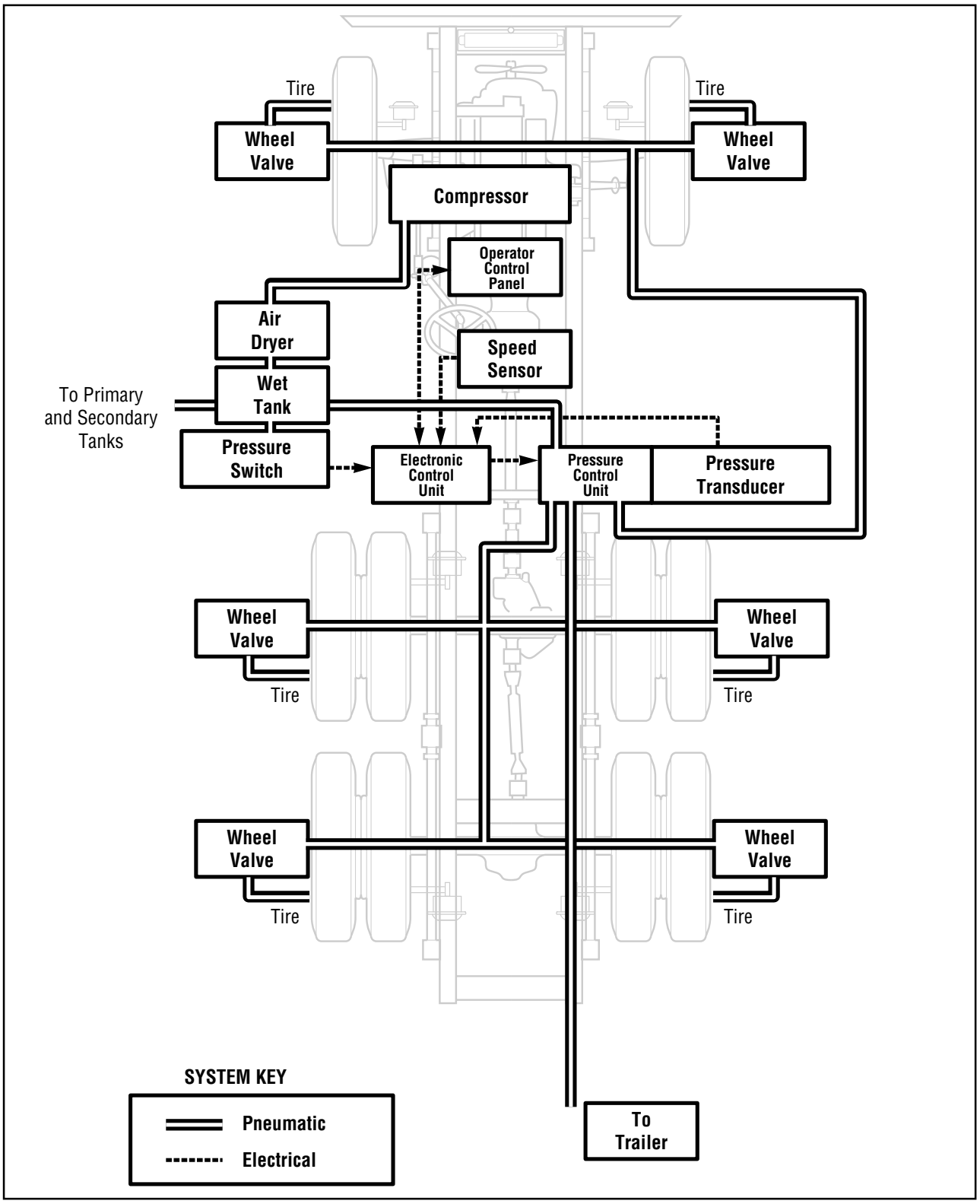

Figure 2 Tire Pressure Control System Simplified Schematic

Note: The wiring harness connects all electrical components of the Tire Pressure Control System. Figure 3 is a diagram of a wiring harness that shows the various connectors and their attachment points. Refer to this figure when performing any of the following procedures.

Note: See Tire Pressure Control System Troubleshooting Guide for a wiring schematic of the Tire Pressure Control System.

Note: See the Troubleshooting Manual for procedures on running diagnostics on the Tire Pressure Control System.

Note: See Section 4: Pneumatic Service for instructions on replacing the Pneumatic Control Unit, replacing the Pneumatic Control Unit's Pressure Transducer, and replace the Pressure Switch.

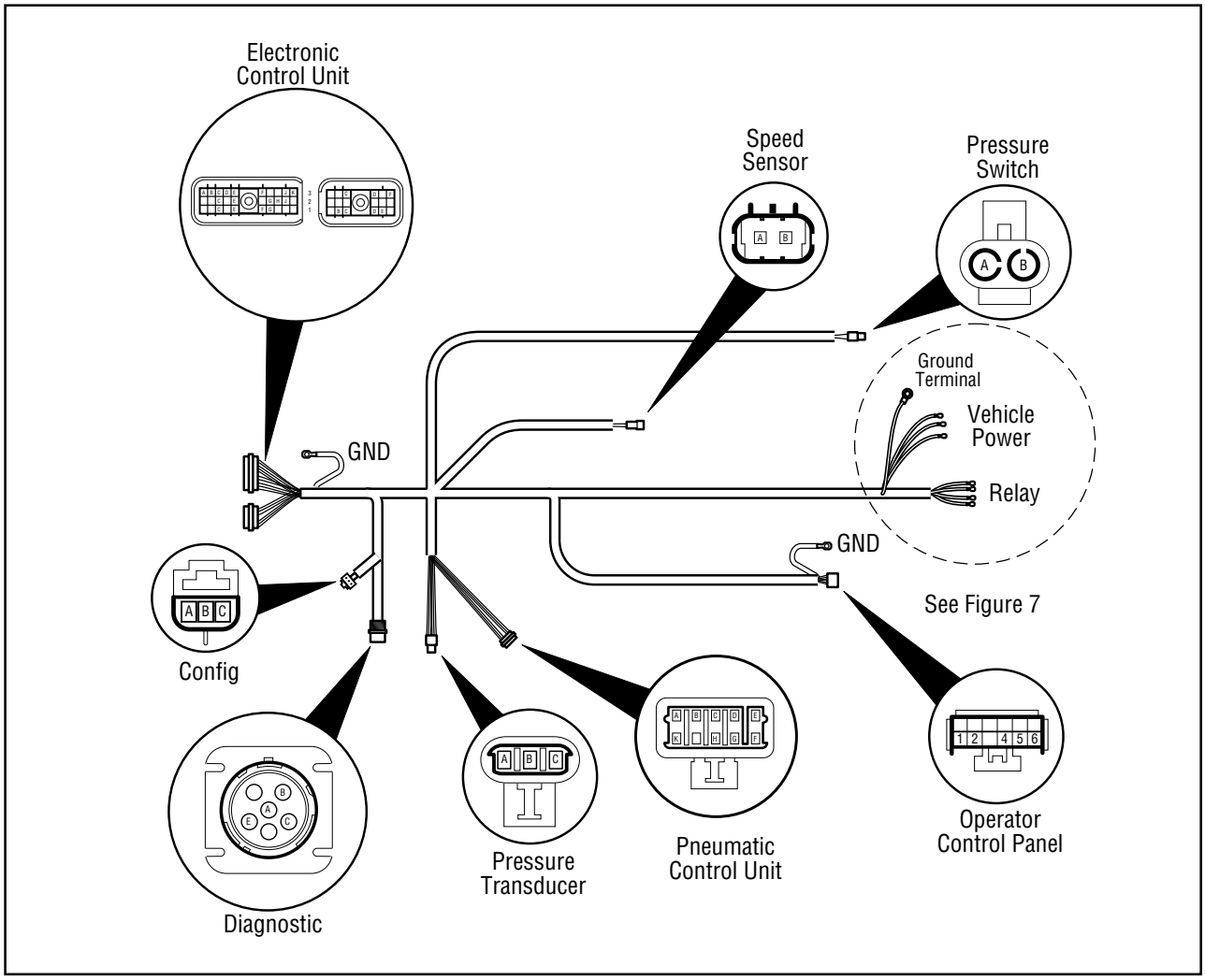

Figure 3 Wiring Harness Diagram

Terminal, Connector and Wire Service

The Tire Pressure Control System electrical system requires good electrical signal paths. Proper installation and maintenance of wires and connectors are essential to the proper operation of the Tire Pressure Control System. The following procedures are recommended for replacing terminals and connectors and making wire splices.

Figure 4 shows the steps to put a new terminal on a wire. Note the two sets of wings: one set crimps the core and one set crimps the insulation.

To replace a terminal:

1. Make sure the insulation is removed cleanly and that the wire strands are undamaged.
2. Install new weather boot on wire, placed in proper direction.
3. For a “pull-to-seat” terminal, feed plain wire through connector before attaching terminal.
4. Position wire in terminal. First crimp core wings, then crimp insulation wings.
5. After making a hand crimp, solder the terminal.

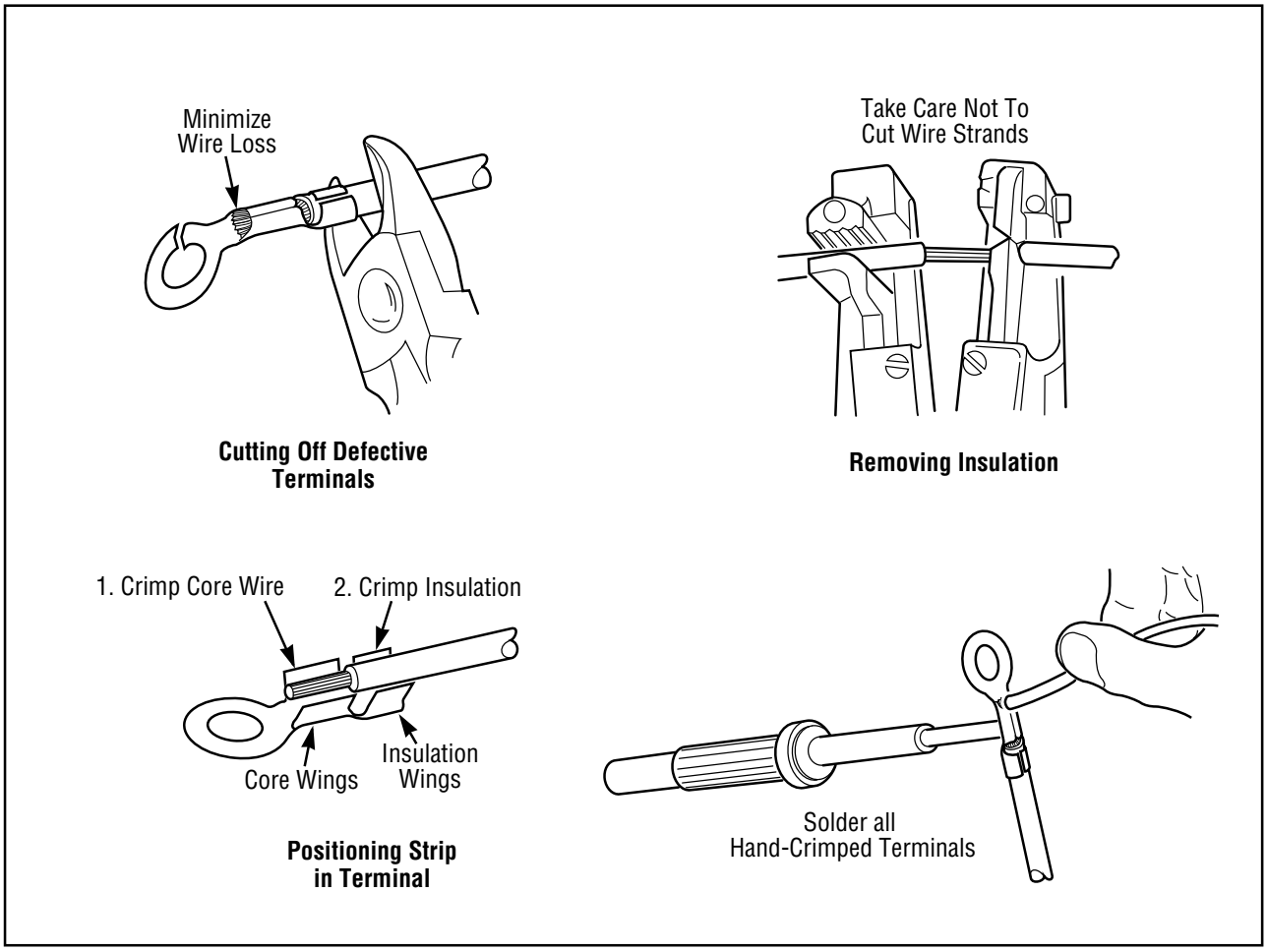

Figure 4 Replacing Terminals

Splicing Wire

Figure 5 shows the steps to splice two sections of wire.

Remove insulation cleanly taking care not to damage wire strands. Slide automotive grade heat shrink over area to be sealed and slide to one side. After hand crimping splice clip, the joint should be soldered. Cover entire splice with automotive grade heat shrink, making sure heat shrink extends over insulation on both sides of splice.

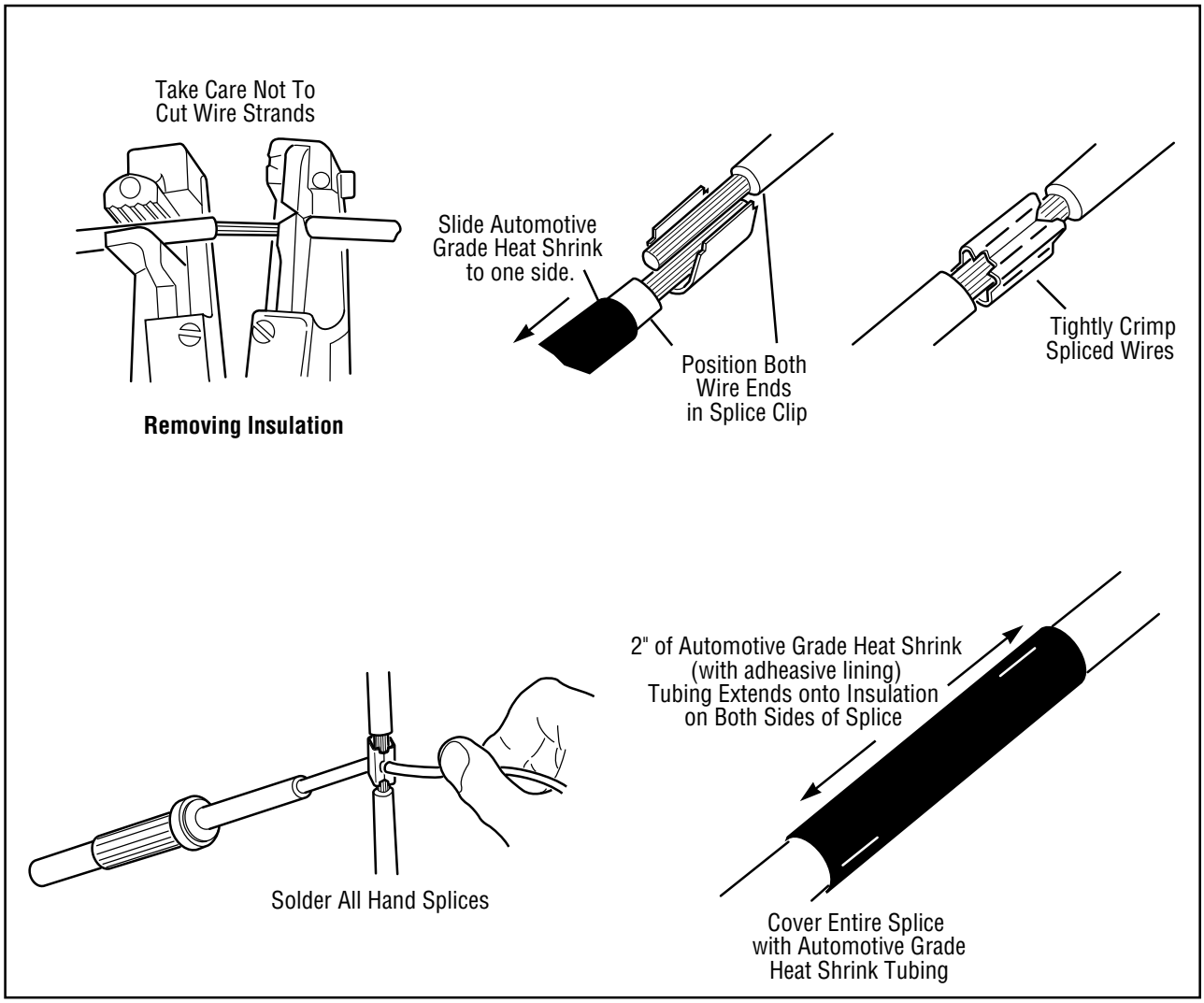

Figure 5 Splicing Wire

Speed Sensor Repair/Replacement

The first step in replacing the speed sensor is to determine the type. Figure 6 illustrates two types of sensors. After determining the type, follow the corresponding replacement procedures.

Magnetic Sensor

Note: This procedure requires cutting the existing vehicle speedometer wires and splicing these wires with the second set of wires from the Speed Sensor.

This procedure only applies to the dual coil (bifilar) sensor. Single coil sensors are a direct replacement.

1. Turn off the vehicle's ignition and engine.
2. Locate the Speed Sensor. The Speed Sensor is located on the output shaft bearing cover of the transmission or transfer case.
3. Disconnect the connector on Tire Pressure Control System harness.
4. Cut off vehicle speedometer sensor connector at butt splice leaving 3" of wire on connector side.
5. Strip $^{3}/_{16}$" of insulation off the vehicle speedometer connector wires.
6. Remove the locking nut for the old speed sensor and unscrew it.
7. Thread the new Dual Output Electrical Speed Sensor in by hand until it bottoms out and then back it out $^{1}/_{2}$ turn. Secure with locking nut.
8. Slide heat-shrink tubing provided (2" long) over each of the new Speed Sensor wires.
9. Install and crimp butt splices connecting vehicle speedometer wires and new Speed Sensor wires.
10. Center the Heat-Shrink tubing over the butt splice and apply suitable, low level heat.
11. After heat application, check for adhesive flow of each end of tubing.
12. Connect the Tire Pressure Control System wiring connector to the new Speed Sensor.

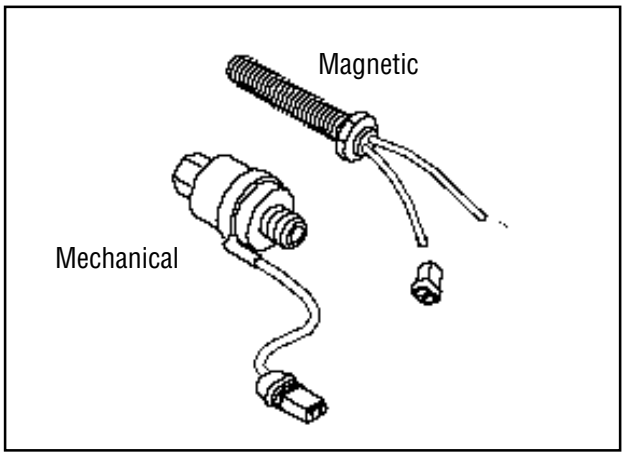

Figure 6 Speed Sensors

13. Check all wiring for appropriate clearance.
14. Start the vehicle and test the Tire Pressure Control System.

Mechanical Sensor

1. Turn off the vehicle's ignition and engine.
2. Locate the Speed Sensor. The Speed Sensor is located on the output shaft bearing cover of the transmission or transfer case.
3. Disconnect the Tire Pressure Control System wiring connector from the old Speed Sensor.
4. Unscrew the speedometer cable from the old Speed Sensor.
5. Remove Speed Sensor.
6. Align drive tangs and thread in new speed sensor. Torque to 12–15 lbs. ft. (16–20 N•m).
7. Connect the Tire Pressure Control System wiring connector to the new Speed Sensor.
8. Thread the speedometer cable onto new Speed Sensor.
9. Check all wire routing for appropriate clearance.
10. Start the vehicle and test the Tire Pressure Control System.

Wiring Connections

Configuration Connector

This connector initializes the Electronic Control Unit for the current vehicle configuration (see Figure 9). Depending on application, factory supplied jumper connector may be provided.

Relay and Power Connections

Figure 7 shows the terminal connections to the relay and the vehicle power panel. The connections must be made as shown. The relay lugs plug into the bottom of the relay sockets.

Vehicle Grounds

There are three ground terminals that must be secured to the vehicle chassis. The ground terminals are for the Electronic Control Unit, Operator Control Panel and vehicle interface. Figure 3 shows the three grounds and their attachment points.

Caution: The battery and the switched ignition are fused individually with a circuit breaker or a fuse. (See Figure 7 for power requirements.)

Lamp Switch

The lamp wire provides back-lighting for the Operator Control Panel keypad and dims the display. Some vehicles use a separate switch to control intensity. This may be connected to the headlamp circuit, a day time running light (DRL) system or a separate switch. This is a switched input and cannot be connected directly to the dimmer switch.

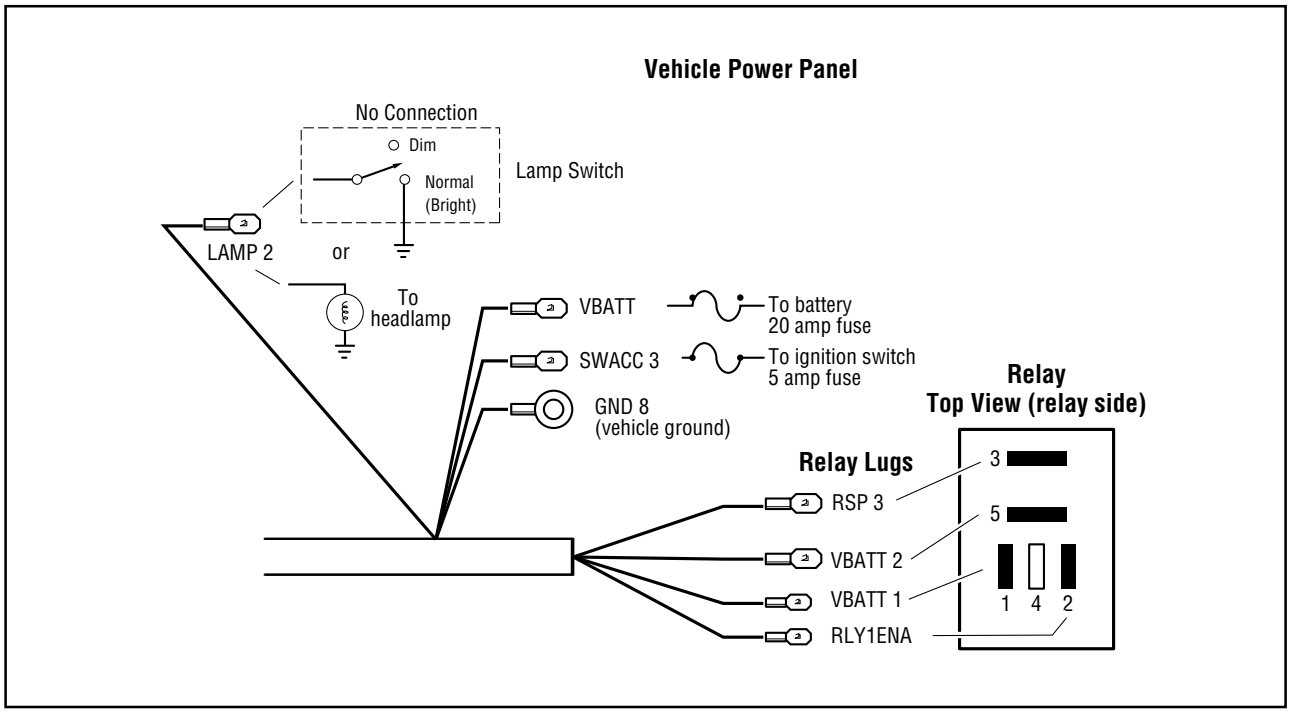

Figure 7 Terminal Connections

Electronic Control Unit Replacement

1. Turn off the vehicle's ignition and engine.
2. Locate the Electronic Control Unit. The Electronic Control Unit is typically mounted in the cab behind the passenger seat.
3. Use a hex driver to disconnect the two wire harness connectors.
4. Remove the Electronic Control Unit.
5. Mount the new Electronic Control Unit.
6. Connect the wire harness.
7. Start the vehicle and test the Tire Pressure Control System.

Operator Control Panel Replacement

1. Turn off the vehicle's ignition and engine.
2. Locate the Operator Control Panel. The Operator Control Panel is typically mounted in the cab on the dash where the driver can easily access it.
3. Remove the four mounting screws and carefully pull the Operator Control Panel through the dash.
4. Disconnect the wire harness connector from the Operator Control Panel.
5. Connect the wire harness to new Operator Control Panel.
6. Mount the new Operator Control Panel with the existing mounting hardware.
7. Start the vehicle and test the Tire Pressure Control System.

Operator Control Panel Back Lamp Removal

1. Turn off the vehicle's ignition and engine.
2. Locate the Operator Control Panel. The Operator Control Panel is typically mounted in the cab on the dash where the driver can easily access it.
3. Remove the four mounting screws and carefully pull the Operator Control Panel through the dash.
4. Disconnect the wire harness connector from the Operator Control Panel.
5. Remove back cover by pressing in the two tabs opposite the connector end.
6. With back cover off, place the Operator Control Panel face down with the connector to the right.

Note: Lamp is located in the top left hand corner.

7. To remove lamp, insert small screwdriver in back of lamp and turn counterclockwise 1/4 turn to remove.

To install Operator Control Panel bulb, (part number 5559106) reverse removal procedures.

Pressure Transducer

1. Turn off the vehicle's ignition and engine.
2. Disconnect electrical connectors at Pneumatic Control Unit cover.
3. Remove the Pneumatic Control Unit Cover and locate the pressure transducer.
4. Disconnect the wire harness connector from the pressure transducer.
5. Unscrew the pressure transducer and remove.
6. Screw new pressure transducer into the Pneumatic Control Unit and tighten to 10–12 lbs. ft. (14–16 N•m).
7. Connect the internal wire harness connector to the pressure transducer and install protective cover. Torque cover fasteners to 35-45 lbs. in. (4-6 N•m).
8. Reconnect the Pneumatic Control Unit harness connector to the proper cover positions.
9. Start the vehicle and test the Tire Pressure Control System.

Note: When repairs to the Pneumatic Controller have been completed, the servicing technician should assure proper system function before putting vehicle back in service. As a minimum, the system should be inflated using the Operator Control Panel to achieve the highway loaded setting and then deflated until the off-highway loaded setting is achieved.

Caution: The Eaton Tire Pressure Control System has the ability to maximize the vehicle's ability to operate in various conditions. Until the system adjusts to repairs, tire pressures may be temporally lower than expected. The above procedure is necessary before returning the vehicle to service.

Note: Figure 8 shows the pneumatic layout for a three-axle installation of the Tire Pressure Control System. This layout is typical for a tractor or straight truck and shows the air line for a trailer connection. Refer to this figure when performing any of the following procedures.

Note: See the Troubleshooting Manual AXTS-0010 for procedures on locating pneumatic problems with the Tire Pressure Control System.

Note: See Section 3 on Electrical Service for information on electrical connections to the Pneumatic Control Unit.

Service Guidelines

The Tire Pressure Control System does not require additional maintenance. However, additional care with the vehicle's air system may assure trouble free operation. The following are some general rules that apply to Tire Pressure Control System service:

Clean and Dry Air Supply

The Eaton Tire Pressure Control System requires a constant supply of clean dry air. An adequately sized and properly maintained air dryer is critical for continued proper operation of the Tire Pressure Control System. Even though the air dryer may be working properly, moisture can accumulate in the wet tank during normal operation due to the increase in air consumption. It is important to drain the wet tank daily. Draining the wet tank completely (to 0 pressure) when the truck is not in use will help keep moisture under control.

Wet Tank Requirements

A minimum wet tank volume is required for proper operation of the Tire Pressure Control System. Verify that the vehicle is equipped with the proper Wet Tank:

- 1400 in^3 (6 gal.) for tractor only or tractor/trailer configuration
- 2800 in^3 (12 gal.) for a tractor with a two trailer configuration. See Figure 9 for proper hose selection. Do not reduce the size of wet tank or hoses.

Supplied Parts and Fittings

In selecting parts, be alert to slight differences between items and make sure you are using the correct part. In particular, watch out for different hose and tubing lengths and fitting diameters.

No Kinking or Stretching

All hose and tubing segments should assemble with slight excess lengths. There should be no kinks or sharp bends and no segments should require stretching in order to tighten joints. When servicing hoses be sure not to increase or reduce overall control volumes. If any tube or hose segment does not fit easily, it could mean you are not using the proper part or that you are not following service procedures properly.

Joint Compound

Here are some important "**DO's**" and "**DON'Ts**" regarding the use of thread sealant:

- **Do** apply a thin coating of compound on male threads of pipe joints.
- **Don't** use any compound on O-ring, compression, or flare fitting connections. Instead, apply a thin coat of silicone grease to O-rings and flares.
- **Don't** use Teflon thread tape anywhere in the air system. (Teflon tape shreds can become lodged in valving.)

Tubing and Hoses

Plastic tubing is defined in this manual as nonmetallic air brake system tubing that meets or exceeds the requirements of SAE J844. Tubing that is approved under this SAE standard will be marked every 15" or less along the length of the tubing with the following:

- Air Brake
- SAE J844
- Type (A or B)
- Nominal tubing O.D. in fractions of an inch
- Tubing manufacturer's identification

Wire braid hose is defined in this manual as automotive air brake hose that meets or exceeds the requirements of SAE J1402. Hose that is approved under this SAE standard will be marked every 15" or less along the length of the tubing with the following:

- Hose manufacturer's identification
- Air brake
- Nominal hose I.D. in fractions of an inch
- SAE J1402

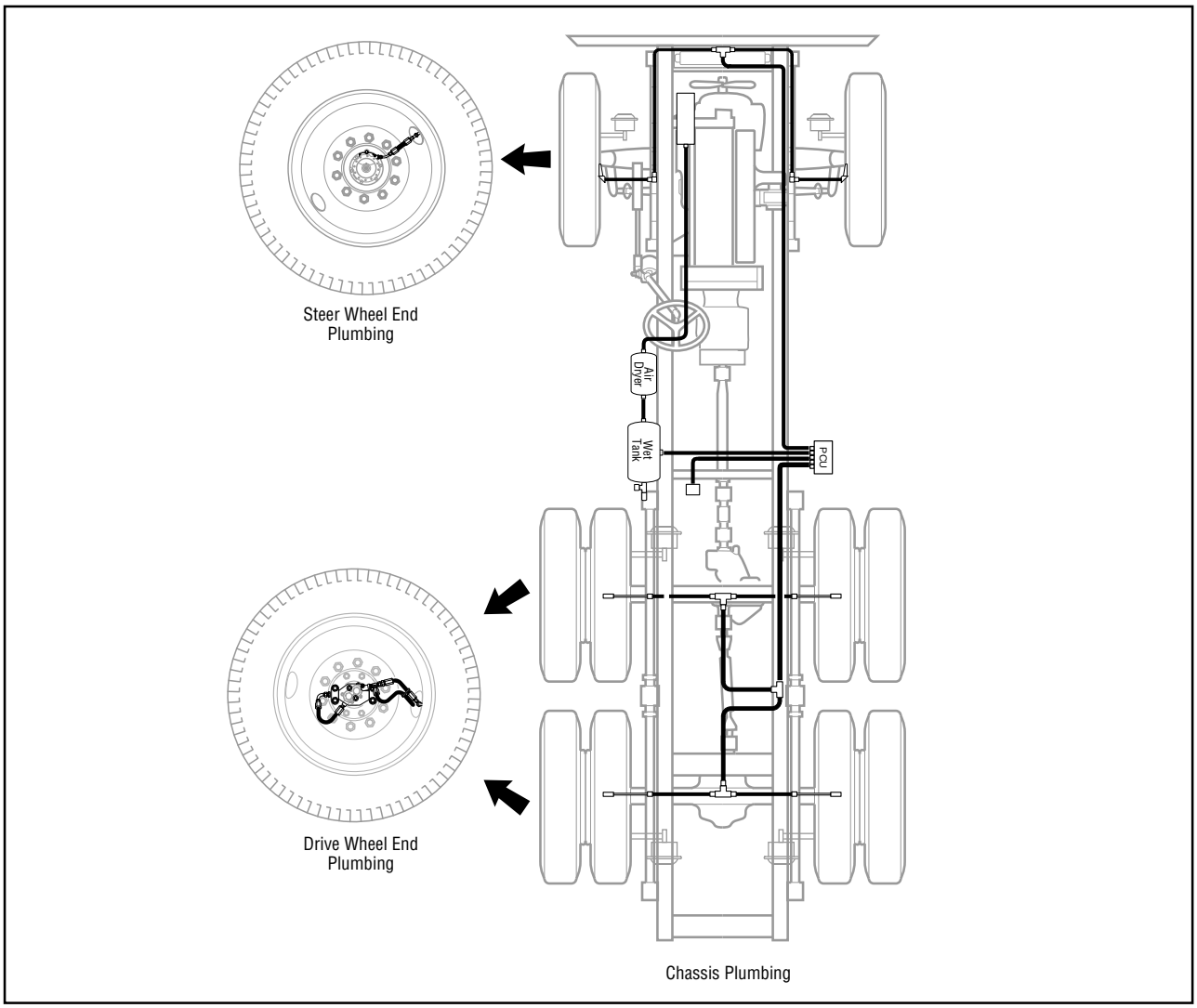

Figure 8 Overview of Tractor Air Line Routing

Hose Lengths

Caution: Proper Tire Pressure Control System operation requires correct air line diameters and lengths for each channel.

Air Line Support

Each segment of the pneumatic system must be secured to the vehicle frame or other installed line. After completing assembly of each segment, use cable ties to anchor the segment at approximately 18" intervals.

Tire Pressure Control Hose/Configuration Requirements

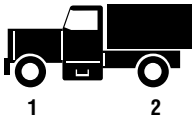

Two Axle Truck (Config. 1)

Configuration Connector Part Number	Hose Length			Wet Tank Size
	Steer	Drive	Trailer	In^3 (Gal)
673443	17-19' of $^5/_8$" OD*	14-16' of $^5/_8$" OD	N/A	1400 (6)

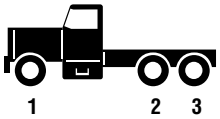

or

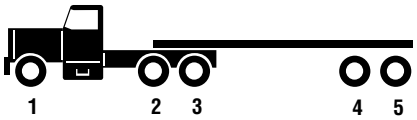

Three Axle (Tandem) Truck, with or without Tandem Trailer (Config. 0)

Configuration Connector Part Number	Hose Length				Wet Tank Size
	Pneumatic Control Unit to trailer hose connection	Steer	Drive	Trailer	In^3 (Gal)
No Connector	5-30' of $^1/_2$ " OD	17-19' of $^5/_8$" OD*	17-23' of $^1/_2$" OD	45-55' of $^5/_{16}$" ID 30-40' of $^1/_2$ " OD	1400 (6)

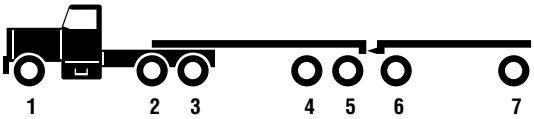

Three Axle (Tandem) Truck, with or without Two Trailers (7 or 8 axles) (Config. 2)

Configuration Connector Part Number	Hose Length				Wet Tank Size
	Pneumatic Control Unit to trailer hose connection	Steer	Drive	Trailer	In^3 (Gal)
673444	5-30' of $^1/_2$ " OD	17-19' of $^5/_8$" OD*	17-23' of $^1/_2$" OD	80-100' of $^5/_{16}$" ID 55-70' of $^1/_2$" OD	2800 (12)

Note: Wire braid hose diameter is inside diameter (I.D.). Nylon hose diameter is outside diameter (O.D.).

*This length does not include the section from the frame to the inlet tube.

Figure 9 Hose/Configuration Requirements

Pneumatic Control Unit Replacement

Note: Refer to Figure 10 for the following steps.

1. Turn off the vehicle's ignition and engine.

⚠ **Warning:** Drain off air from the wet tank before removing any fittings!

2. Locate the Pneumatic Control Unit.
3. Disconnect the wire harness connectors from the Pneumatic Control Unit.
4. Note the Pneumatic air line location, mark if necessary.
5. Remove the pneumatic connections from the Pneumatic Control Unit.
6. Remove the Pneumatic Control Unit.
7. Mount the new Pneumatic Control Unit.

Note: Apply light coating of removable thread sealing compound to the NPT fittings before installing.

8. Install 1/4" male NPT to 1/2" nylon air brake tubing fitting into Supply, Trailer, and Drive ports the Pneumatic Control Unit.
9. Install 1/4" male NPT to 3/8" NPT female increasing adapter to 3/8" male NPT to 5/8" nylon air brake tubing fitting into the steer port of the Pneumatic Control Unit.
10. Attach the Pneumatic air line to the Pneumatic Control Unit in the same locations as marked in Step 4.

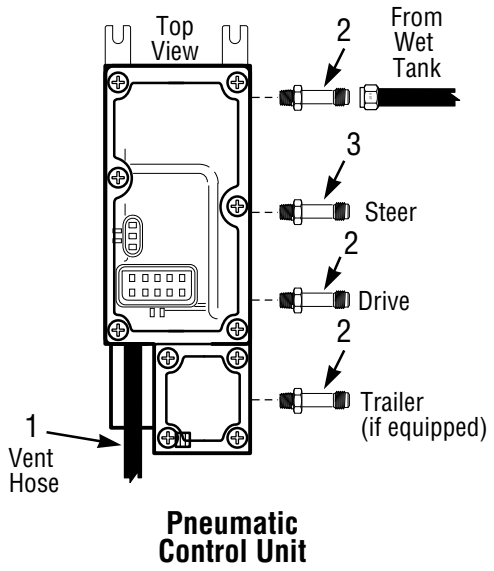

1. Pneumatic Control Unit vent hose 5/8 ID vent (heater) hose
2. 1/4" male NPT to 1/2" nylon air brake tubing fitting
3. 1/4" male NPT to 3/8" NPT female increasing adapter to 3/8" male NPT to 5/8" nylon air brake tubing fitting

Note: Area highlighted shows typical connections. Actual fittings may vary by vehicle manufacturer.

Figure 10 Pneumatic Control Unit and Pneumatic Layout

11. Install the Pneumatic Control Unit. Secure unit with 1/4" x 20 mounting studs or bolts.

Note: For additional air line protection, rubber grommets are installed in the cab floor. Check condition of these grommets and replace if necessary.

12. Connect 5/8" I.D. vent hose to Pneumatic Control Unit vent using hose clamp.
13. Connect the wire harness connections to the Pneumatic Control Unit.
14. Start the vehicle and test the Tire Pressure Control System.

Pressure Switch

Note: Refer to Figure 11 for the following steps.

Note: The following procedure discusses replacing the Pressure Switch.

1. Turn off the vehicle's ignition and engine.
2. Locate the Wet Tank. The Wet Tank is the first tank from the dryer.

Warning: Drain off air from the Wet Tank before removing any fittings!

Pressure Switch Replacement

1. Disconnect the electrical connector of the existing Pressure Switch.
2. Unscrew the existing Pressure Switch.
3. Install the new Pressure Switch so the electrical connector on the Pressure Switch faces up. Torque Pressure Switch to 15 lb.ft. maximum.
4. Connect the cable to the electrical connector of the new Pressure Switch.
5. Start the vehicle and test the Tire Pressure Control System.

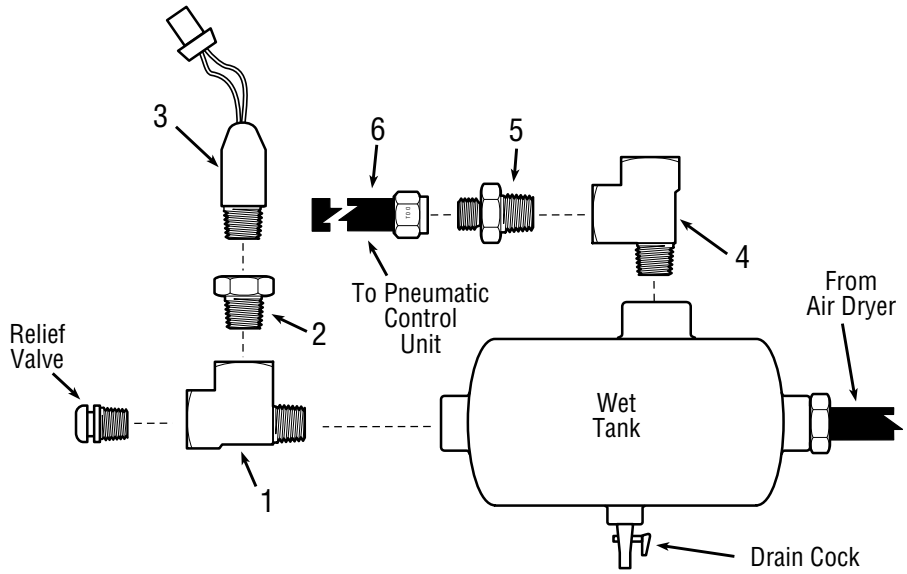

Note: Do not install pressure switch in supply line to the Pneumatic Control Unit.

1. 3/8" NPT run Tee	4. 1/2" NPT run Tee (varies with vehicle mfg.)
2. 3/8"male NPT to 1/4" female NPT reducing adapter	5. 1/2" male NPT to 1/2" nylon air brake tubing fitting
3. Pressure switch	6. 1/2" nylon air brake tubing

Note: Area highlighted shows typical connections. Actual fittings may vary by vehicle manufacturer.

Figure 11 Routing for Wet Tank Pneumatics

Steer Axle Pneumatic Replacement

Note: Refer to Figure 12 when replacing the pneumatics for a steer axle.

Remember the following important points while performing this procedure:

- The left and right nylon air brake tubing sections must be of equal lengths.
- The correct length must be used to make up the combination of the left section, the right section, and the supply section
- Do not trim off any extra tubing; use cable ties to secure any slack segments.
- The length of $^{5}/_{16}$" wire braid hose is custom to each job. When replacing the hose, cut to allow maximum right and left turns without kinking or binding. Using compressed air, clean replacement air lines and check for any obstructions.

1. Turn off the vehicle's ignition and engine.

Warning: Drain off all air from the wet tank before removing any fittings!

2. Refer to Figure 12 and remove the damaged or broken components.

Note: Refer to the following steps as required to replace individual components.

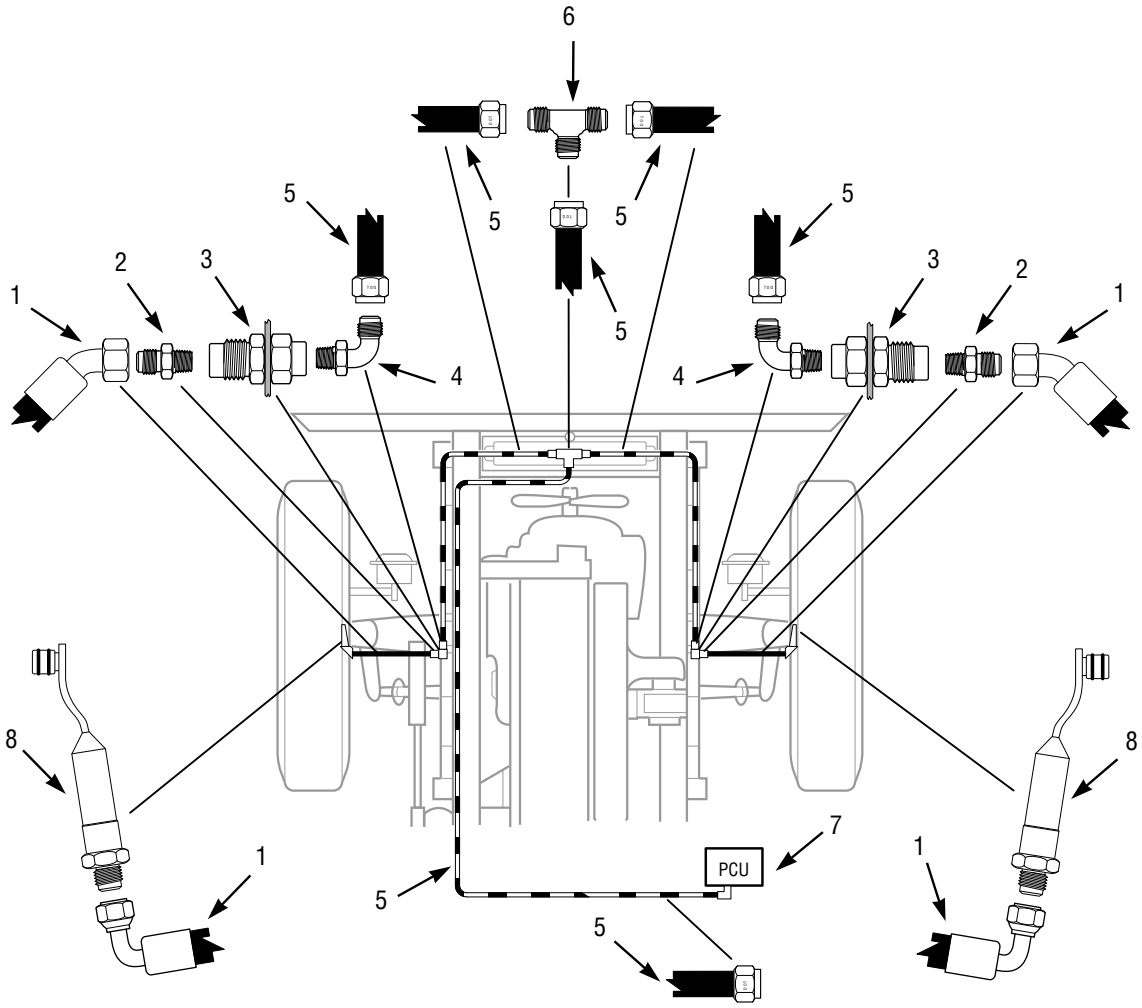

1. 5/16" wire braid hose with a 37° female flared hose end, 45° elbow and a 37° female flared hose end, 90° elbow
2. 3/8" male NPT to 3/8" male 37° flared
3. 3/8" female NPT to 3/8" female NPT bulkhead union
4. 3/8" male NPT to 5/8" nylon air brake tubing, 90° elbow
5. 5/8" nylon air brake tubing
6. 5/8" nylon air brake tubing union Tee
7. Pneumatic Control Unit (in-cab)
8. Steer axle inlet tube, if so equipped

KEY

Plastic Tubing
See Chart in Figure 9

Wire Braid Hose
See Chart in Figure 9

Note: Area highlighted shows typical connections. Actual fittings may vary by vehicle manufacturer.

Figure 12 Steer Axle Air Line Routing

Drive Axle Pneumatic Replacement

Note: Refer to Figures 13 and 14 for the following steps.

Note: The following procedure discusses replacing the pneumatics for a Drive Axle. You may not require all the steps depending on what parts you are replacing.

1. Turn off the vehicle's ignition and engine.

Warning: Drain off all air from the wet tank before removing any fittings!

2. Refer to Figure 14 and remove the damaged or broken components.

Note: Note the following important points while performing this procedure:

- The front and rear wire braid hoses must be equal lengths (see Figure 14).
- The correct length of tubing must be used to make up the supply section. Do not trim off any extra tubing; use cable ties to secure any slack segments. See Figure 9.
- Using compressed air, clean replacement air line and check for obstructions.
- Figure 13 shows typical mounting locations.

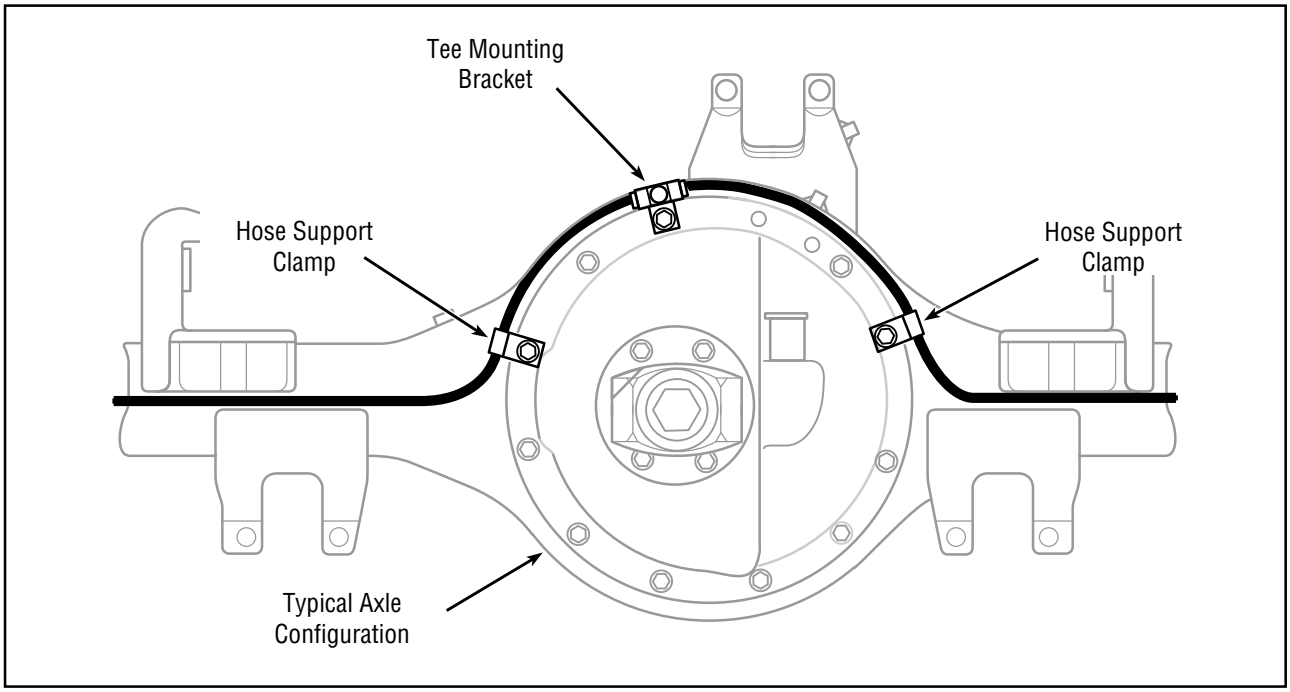

Figure 13 Branch Tee Axle Mounting

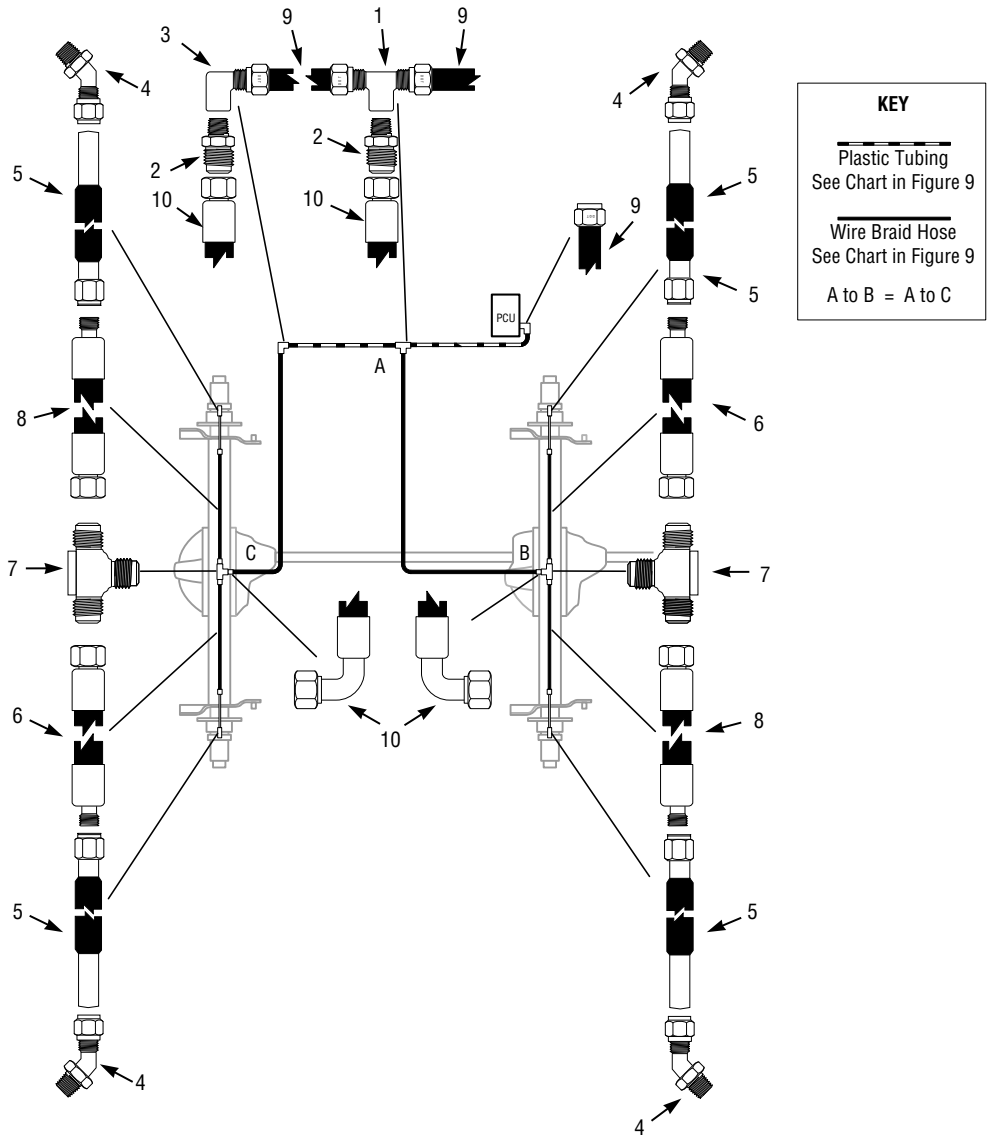

1. 1/2" nylon air brake tubing branch tee, 3/8" NPT female on the branch
2. 3/8" male NPT to 3/8" male 37° flared
3. 1/2" nylon air brake tubing to 3/8" female NPT, 90° elbow
4. For 8.25" brake flange bolt circle, use 1/4" male NPT to 3/8" flareless tube end, 45° elbow and 3/8" NPT 1/4" female NPT reducing adaptor

4a. For 7.25" brake flange bolt circle, use 3/8" male NPT to 3/8" flareless tube end and 45° elbow (not shown)

5. Drive axle inlet tube, stainless steel
6. 5/16" wire braid hose with a 3/8" female 37° flare hose end, swivel straight and a 3/8" male 37° flare hose end, straight, long arm drive axle side
7. 3/8" male 37° flare union tee, 5/8" diameter and 7/16" diameter mounting holes
8. 5/16" wire braid hose with a 3/8" female 37° flare hose end, swivel straight, and a 3/8" male 37° flare hose end, straight, short arm drive axle side
9. 1/2" nylon air brake tubing
10. 5/16" wire braid hose with a 3/8" female 37° flare hose end, swivel straight, and a 3/8" female 37° flare hose end, swivel 90° elbow

Note: Area highlighted shows typical connections. Actual fittings may vary by vehicle manufacturer.

Figure 14 Drive Axle Air Line Routing

Trailer Axle Pneumatic Replacement

Note: Refer to Figures 15 and 16 for the following steps.

The following procedure discusses replacing the pneumatics for a trailer axle. You may not require all the steps depending on what parts you are replacing.

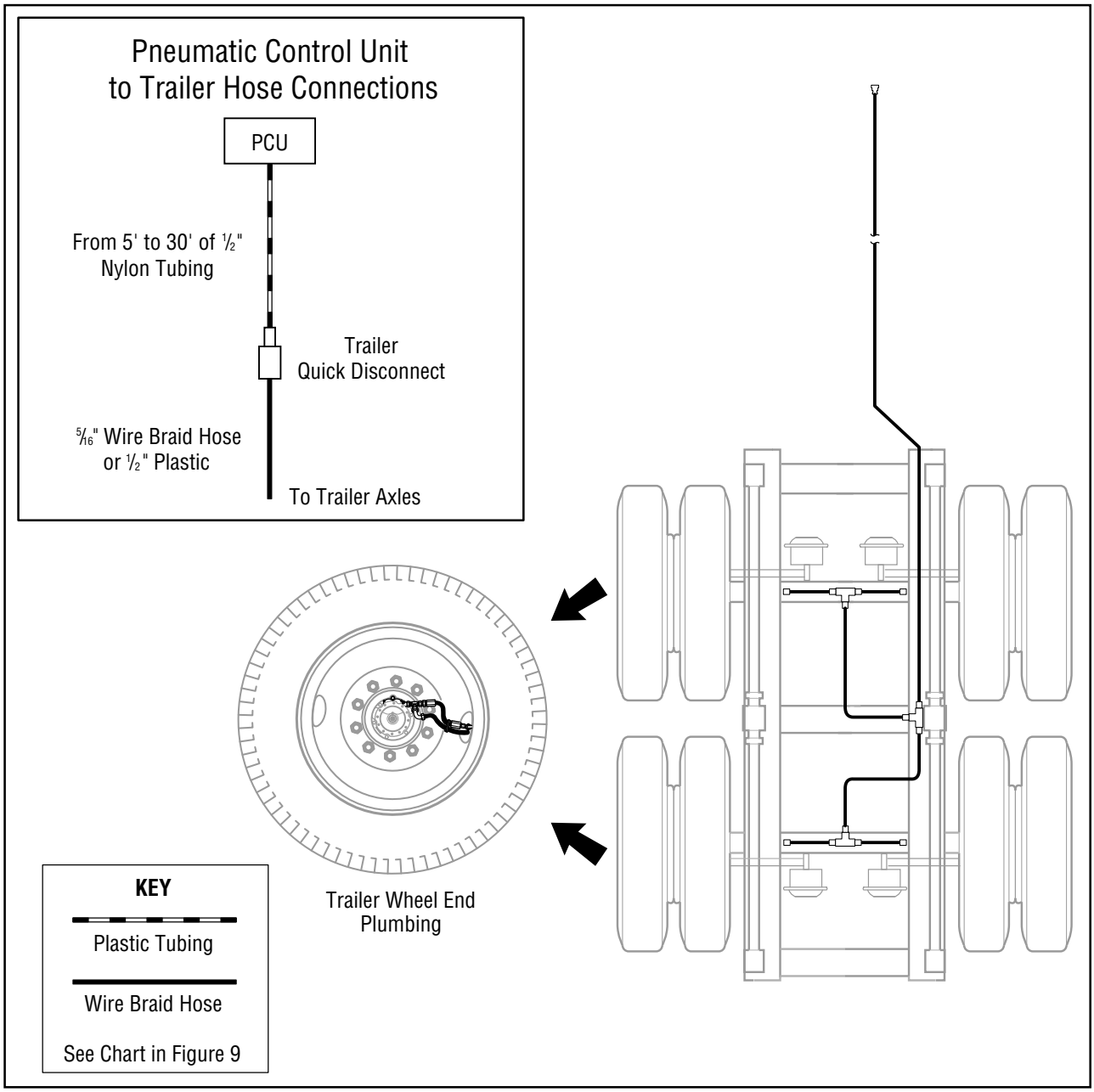

Figure 15 Overview of Trailer Air Line Routing

Note the following important points while performing this procedure:

- If trailer is equipped with a moveable tandem, (is adjustable in length), be sure to provide enough extra air hose to allow full adjustment of trailer. See Figure 9.
- Do not connect the trailer air line to anything other than the trailer mating Tire Pressure Control System connector.
- Front and rear trailer axle wire braid hoses must be equal length, see Figure 16.
- For proper hose lengths, see Figure 9.
- For the Pneumatic Control Unit to trailer connection, see Figure 15.

1. Turn off the vehicle's ignition and engine.

Warning: Drain off air from the wet tank before removing any fittings!

2. Refer to Figure 16 and remove the damaged or broken components.

Note: Refer to the following steps as required to replace individual components. For trailers equipped with a bulkhead, start at step 3. For trailers without bulkheads, start at step 6.

3. Install the quick disconnect for trailer air supply to the bulkhead. (Refer to the brake system's air-supply gladhand for similar installation.)
4. Position the bulkhead fitting to install from interior side of the frame. Connect one end of the 5/16" wire braid hose, which will be routed to the rear axles of the trailer, to the bulkhead fitting. Install into the frame.
5. Install a section of 5/16" wire braid hose between the front of the bulkhead fitting and the tractor quick disconnect. (Refer to the brake system's air supply lines for similar installation.)
6. For trailers without bulkheads, install 5/16" wire braid hose into the quick disconnect fitting using the appropriate fittings.
7. Run the air supply to the non-drive axles in the same manner as the existing air brake supply lines.
8. Locate the protected position for the union Tee midway between the two axles. Connect 5/16" air supply line from the front of trailer to union Tee. Be sure to allow adequate slack in supply line for trailer adjustments.
9. Install 37° flare fittings into the four flange connector nuts on top of the axles. Point the ends inward toward the center of the axles. Install equal lengths of 5/16" braid hoses (with a 3/8" 37° female fitting) between 37° flare fittings and the union Tees. Mount the 37° flare union Tees to the center of each axle housing. Use cable ties to secure Tees to the axle.
10. Using existing lines for guides and securing points, run wire braid hose between rear axle union Tee and front axle union Tee.
11. Using compressed air, clean replacement air line and check for obstructions.

Note: Allow sufficient length for axle articulation.

12. If needed, repeat the previous step for the rear axle. Be sure to use equal length hose for each axle.
13. Inspect entire trailer installation, and install cable ties to secure the assembly every 18" or less.
14. Start the vehicle and test the Tire Pressure Control System.

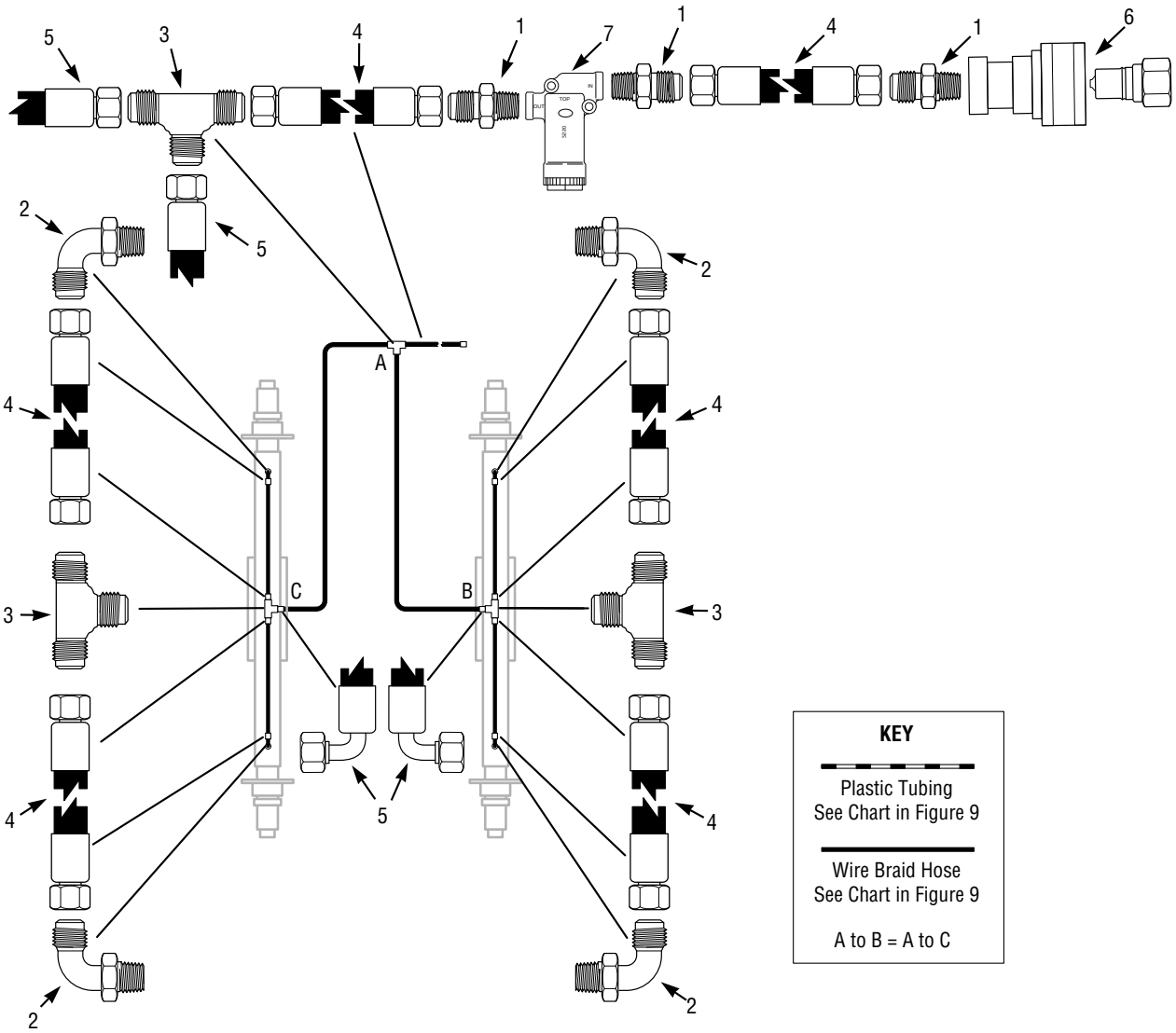

1. 3/8" male NPT to 3/8" male 37° flared adapter
2. 1/4" male NPT to 3/8" male 37° flared, 90° elbow
3. 3/8" male 37° flared union tee
4. 5/16" wire braid hose with 3/8" female 37° flare hose end, swivel straight, both ends
5. 5/16" wire braid hose with a 3/8" female 37° flared hose end, swivel straight, and a 3/8" female 37° flare hose end, swivel 90° elbow
6. Trailer coupling, 3/8" female NPT ports
7. Air filter assembly, 3/8" female NPT ports

Note: Area highlighted shows typical connections. Actual fittings may vary by vehicle manufacturer.

Figure 16 Trailer Axle Pneumatics

Wheel Valve Air Filter Change

Figure 17 shows the location of the air filter in each wheel valve. **This filter must be replaced whenever the tire or wheel valve is serviced and at every tire change.** Use the illustration as a reference in completing the air filter replacement as follows:

1. Working quickly to prevent air loss, remove the tire hose from the outlet port of the wheel valve. Cap hoses to prevent air loss. If outlet port has an adapter, remove it also.
2. Use a screwdriver to unscrew the air filter from the wheel valve. Discard the used air filter.

Note: Air filters should not be cleaned or reused, always replace with a new air filter.

3. Install new air filter into wheel valve outlet port.
4. If wheel valve is to service a dual set of tires, prepare the wheel valve in the following manner. If only servicing a single tire proceed to step 7.

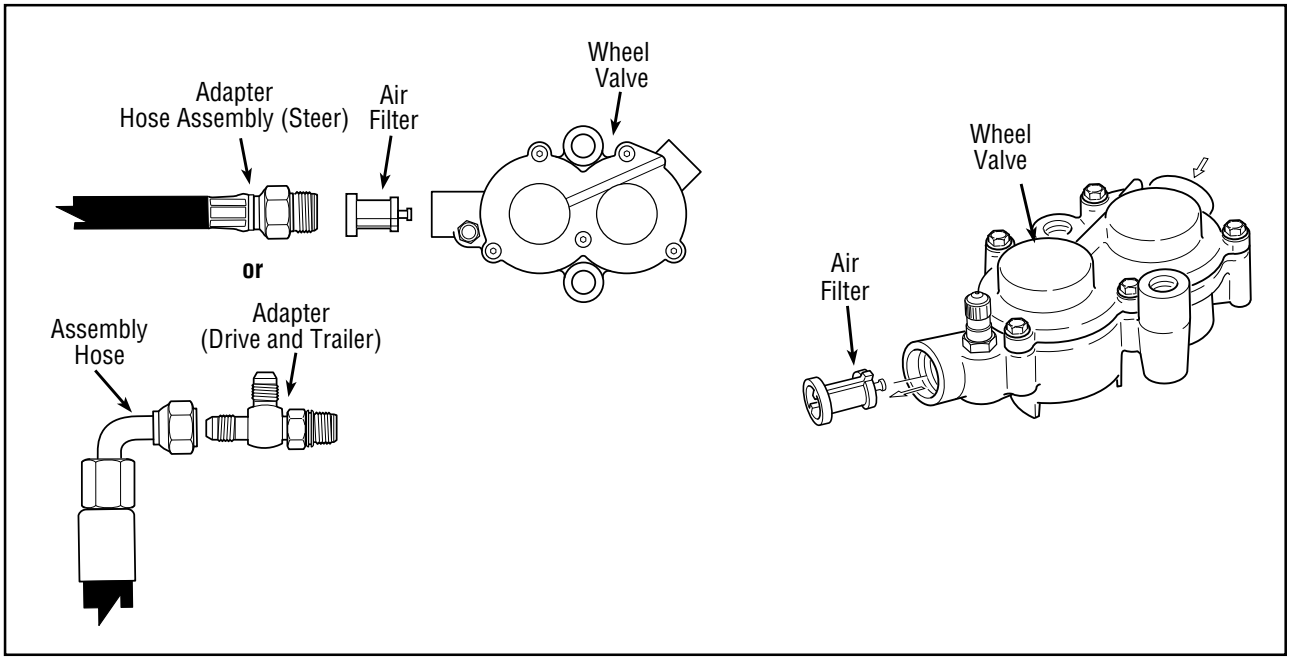

Figure 17 Air Filter Change

Caution: Follow the Eaton recommended procedure for installation of fitting to assure the air filter is not damaged by installing the tee fitting too deeply into the wheel valve (See Figure 18).

A. Lubricate O-ring.

B. Secure lock nut against the O-ring washer.

C. Install the tee into the valve until the O-ring is seated and the washer is against the face of the valve.

D. Back off lock nut.

E. Turn tee clockwise to orient fitting – no more than one turn.

F. Tighten lock nut 16–19 lbs. ft. (22–26 N•m).

Note: Work quickly to minimize air loss during steps 5-7.

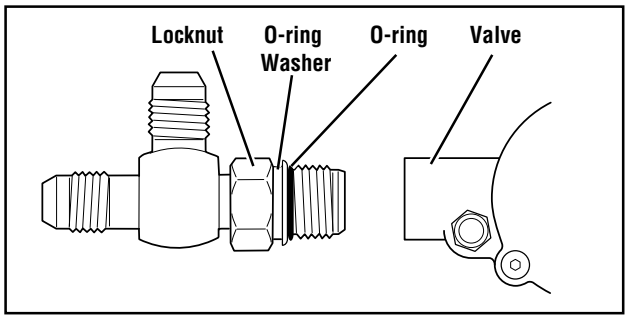

Figure 18 Run Tee

5. Remove cap from inner tire hose, install hose on branch tee. Torque to 16–19 lbs. ft. (22–26 N•m).
6. Remove cap from outer tire, install hose on run tee. Torque to 16–19 lbs. ft. (22–26 N•m).
7. On single tire only: lubricate O-ring then install tire hose on wheel valve. Torque to 16–19 lbs. ft. (22–26 N•m).

Preparation

Warning: Never work under a vehicle supported only by a jack.

To ensure your safety, perform the following steps before doing any service that requires removal of tires and wheels.

1. Properly block wheels.
2. Raise the non-drive axle and support with jack stands of adequate capacity.

Wheel End Air Line Removal

Note: Figure 19 shows non-drive axle air line connections. Use the illustration as a reference and remove as follows:

- Working quickly to minimize air loss, disconnect tire hose from tire and connect cap.

Wheel Removal

Warning: If the tire being removed is not flat, high pressure air will be released when the tire hose is disconnected from the valve stem, use caution and eye protection.

Important: Note the alignment of the tire valve stem to the hub and mark if necessary.

1. Disconnect the tire hose from the valve stem.
2. Disconnect the tire hose from the wheel valve.

Note: Store hose assembly in a clean, dry location to prevent contamination and damage.

3. Cap wheel valve in hubcap to prevent system contamination. Rotate the tire with the hub so that the valve is on the bottom (protect the wheel valve).
4. Remove the wheel nuts and wheel/tire assembly.

Note: Replace the air filter in the wheel valve when the tire or wheel valve is serviced.

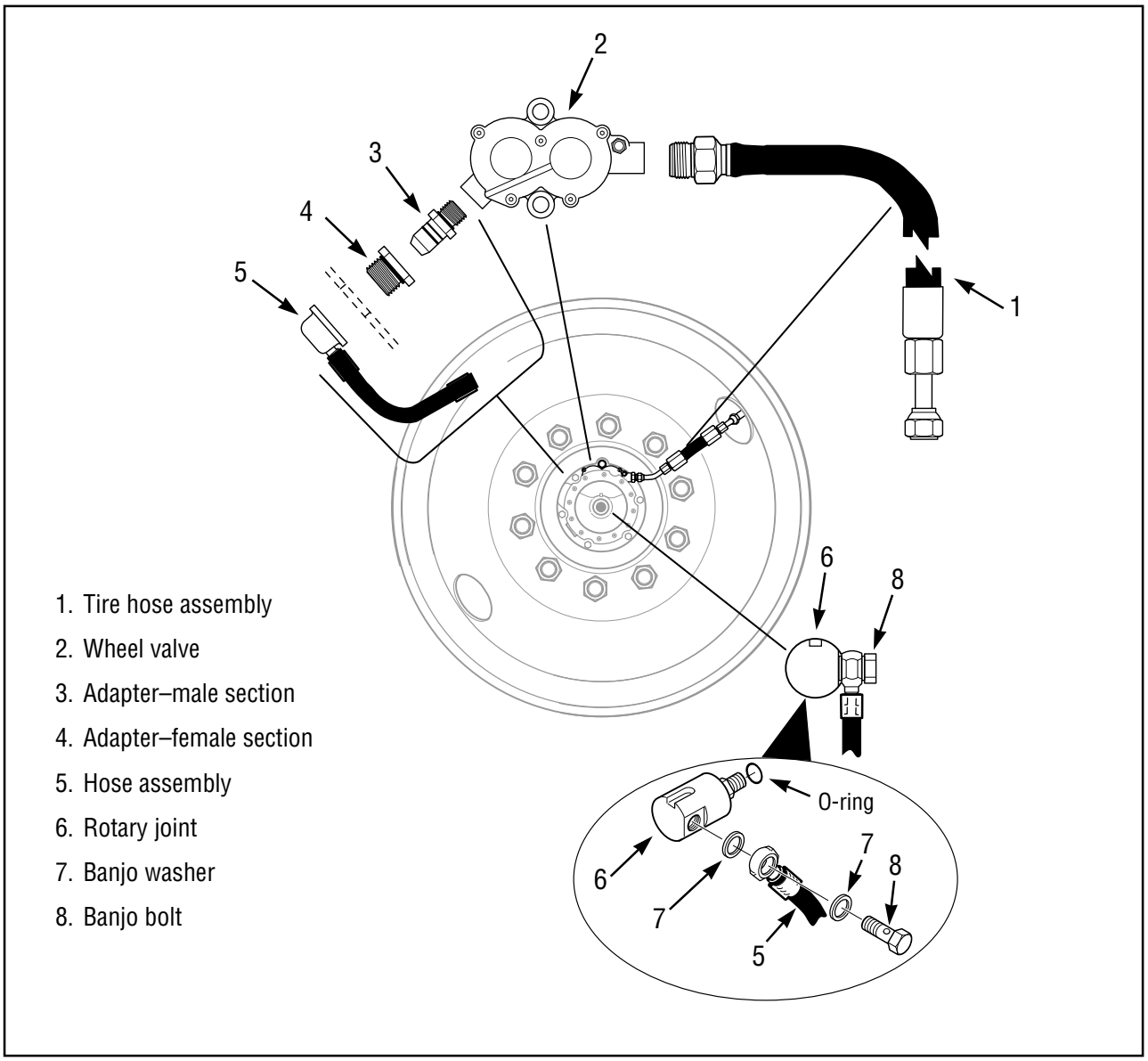

Figure 19 Non-Drive (Steer) Axle Wheel Air Line Routing – Rotary Joint Configuration

Caution: Note the alignment of the hubcap to hub and mark location if necessary.

Hubcap Removal

See Figure 20.

1. Drain oil from hubcap, remove fill plug and drain.
2. Remove wheel valve mounting bolt.
3. Remove wheel valve.
4. Remove 6 attaching bolts (hubcap to hub).
5. Disconnect hose assembly from spindle mounted rotary seal by removing banjo fitting bolt and washers.
6. Remove hubcap and discard hubcap gasket.

Rotary Joint Removal

Use $^{11}/_{16}$ open end wrench no more than $^{3}/_{16}$ thick. Remove rotary joint and discard O-ring.

Hub Service

The hub and wheel seal can now be serviced in the same manner as standard non-Tire Pressure Control System assemblies. Refer to steer axle service manual for procedures.

Inlet Tube Removal (Steer Axles Only)

The steering knuckle must be removed to replace the inlet tube.

1. Remove the steering knuckle in the same manner as standard non-Tire Control Pressure System knuckles. Refer to axle service manual for procedures.
2. Mark location of inlet tube.
3. Remove inlet tube screw, retainer and bracket.
4. Remove inlet tube and discard O-ring seals.

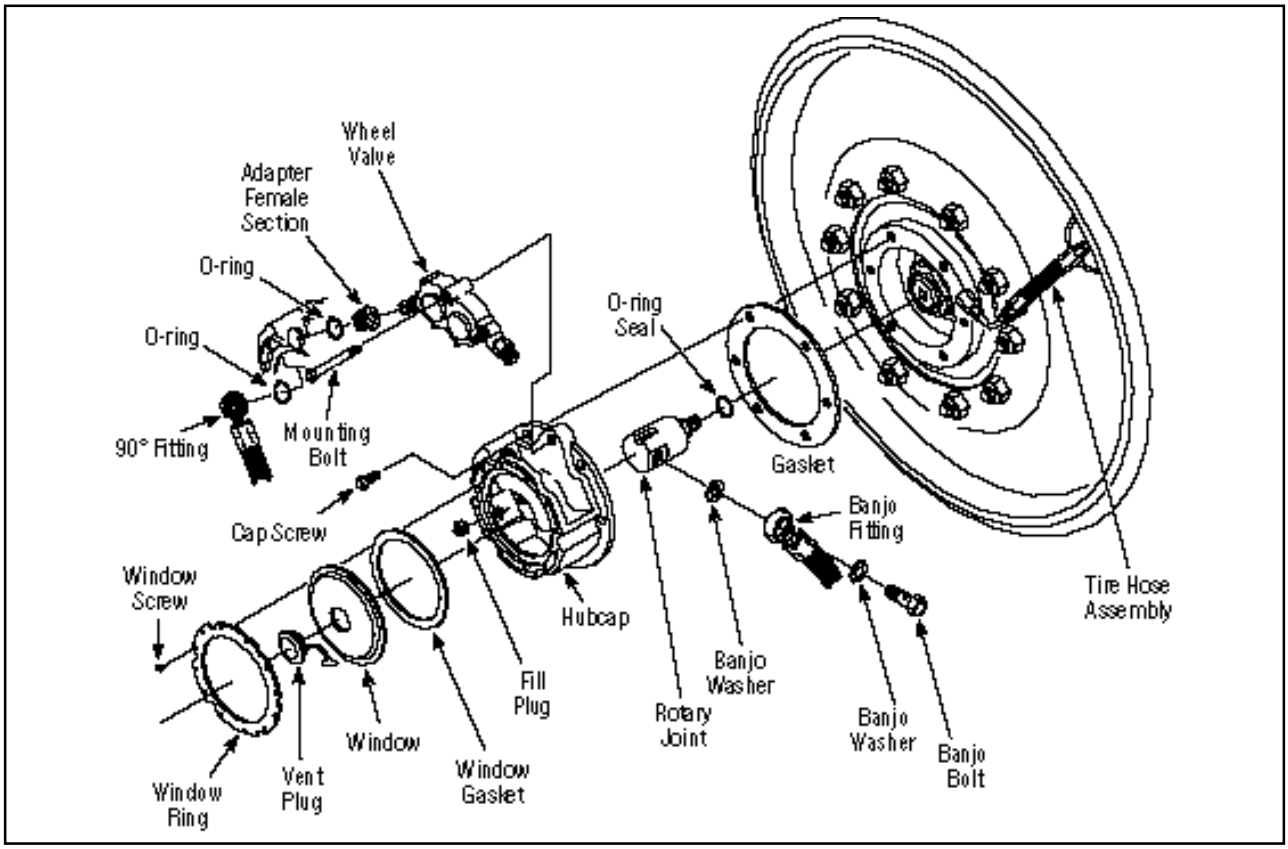

Figure 20 Non-Drive Hubcap Installation – Rotary Joint Configuration

Inlet Tube Installation

See Figure 20A.

1. Apply lubricant to two small O-rings and place in grooves on inlet tube assembly.
2. Install inlet tube assembly into back of knuckle assembly. Refer to Inlet Tube Removal (Steer Axles Only).
   - Align inlet tube so that 37° male flared fitting faces the rear of the vehicle and will not interfere with steering action of the knuckle after installation.
3. Secure inlet tube to back of knuckle with tube retainer using 1/4 x 20 socket head screw and a removable thread locking compound.
4. Plug the spindle and perform a leak test on the inlet tube before installing the knuckle assembly.
5. Refer to the axle service manual and reinstall:
   - knuckle assembly
   - brake assembly
   - wheel hub, seals and bearings
   - wheel bearing adjuster nut
6. Secure inlet tube bracket to back of knuckle with previously removed hardware.

Spindle Adapter Removal (Trailer Axles Only)

The spindle adapter must be removed if there is an internal air leak in the trailer axle.

1. Disconnect fittings at flange nut on trailer axle (see Figure 21 items 2, 3, 4).
2. Attach slide hammer in opening of spindle adapter where rotary joint was fastened (9/16 18 thread) and remove adapter and internal air line.

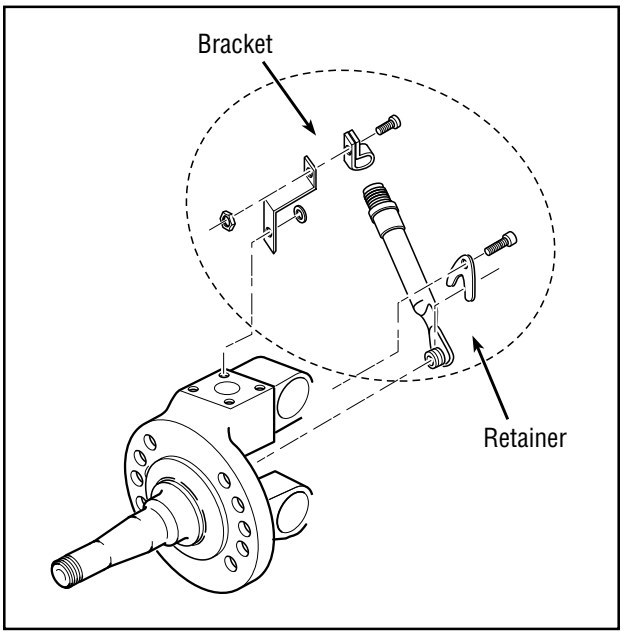

Figure 20A Inlet Tube Installation (Steer)

Internal Air Line Installation (Trailer Axles Only)

Figure 21 shows axle end air line routing.

Warning: Wear safety glasses.

Complete the axle end reassembly as follows:

1. Cut a length of 3/8" nylon air brake tubing about 1 foot longer than the distance between the axle end and the hole in the axle housing.
2. Slide a 6" section of 1/2" nylon air brake tubing *over* the 3/8" tubing to prevent chafing. Position 1/2" tubing 2" from the spindle end of the 3/8" tubing. See Figure 21.
3. Assemble the spindle end of the line as follows:
   - Install the 1/4" male NPT to 3/8" nylon air brake tubing fitting into the spindle adapter.
   - Connect the end of 3/8" nylon air brake tubing with the 1/2" nylon protector tubing to the 3/8" fitting.
4. With the help of an assistant, snake the tubing into the axle end, through the drilled section and out the threaded hole in the housing.

Note: Place a small amount of service removable thread lock on the outside of spindle adapter before installation.

5. Using a bushing installer tool or a small block of wood, drive the spindle adapter into the hole in the axle end until seated.
6. At the top of housing, apply thread sealant and install the axle adaptor nut over the tubing.
7. Pull the tubing taut to take up extra slack. Before trimming off the excess tubing, make sure you have a secure grip on the line to keep it from falling back.
8. Attach the tubing to flange connector using compression nut, compression fitting, and insert.
9. Insert flange connector into adaptor nut. Secure with flange nut.

Caution: Be careful not to rotate the flange connector as this may damage tubing. Wrench flats are provided on flange connector to hold in position.

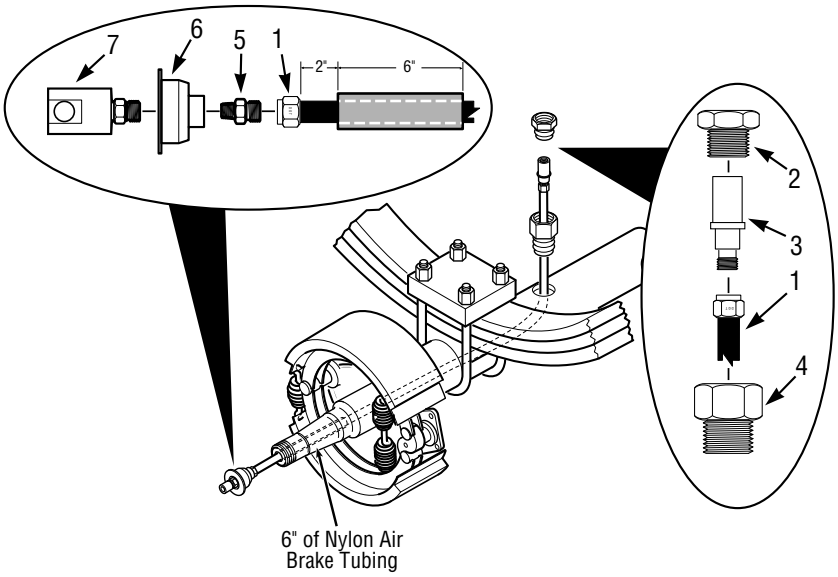

1. 3/8" nylon air brake tubing with compression nut
2. Flange nut
3. Flange connector
4. Axle adapter nut
5. 1/4" male NPT to 3/8" nylon air brake tubing fitting
6. Spindle adapter
7. Rotary joint

Note: Area highlighted shows typical connections. Actual fittings may vary by vehicle manufacturer.

Figure 21 Axle End Air Line Routing

Rotary Joint, Nested Hubcap Installation

To insure an airtight and watertight seal, use care when assembling the following components. Refer to Figures 19 and 20.

1. Apply a thin coat of silicone grease to O-ring and then apply removable thread locking compound on threads and thread rotary joint into spindle. Torque to 31 lbs. ft. (42 N•m), see Figure 20 (use 11/16 open end wrench no more than 3/16 thick).

Caution: Failure to use a 11/16 open end wrench no more than 3/16 inch thick may result in insufficient installation torque and the possibility of the rotary joint unscrewing in service.

Tip: Use one or two studs (or threaded rods) in the hubcap retaining bolt holes to keep the gaskets and spacer in place. This will aid with the installation.

2. Position gasket, spacer (if used) and the second gasket (if used) between the hubcap and the hub.
3. Connect hose assembly to the spindle mounted rotary seal as follows:
   - Place banjo washer on banjo bolt, insert banjo bolt into banjo fitting, place second banjo washer on banjo bolt.
   - Connect assembly the rotary joint. Position banjo at 30° toward hub while tightening to 140-160 lbs. in. (15.8-18.1 N•m). Refer to Figure 22.

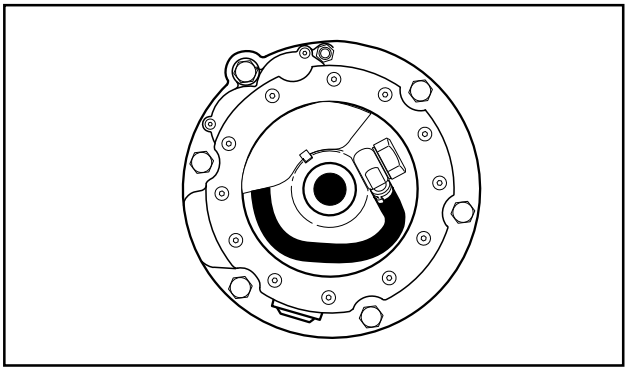

Figure 22 Proper Hose Position

Caution: Failure to align banjo fitting at 30° may result in the hose rubbing against hubcap.

4. Align notch in rotary valve with locating tab inside hubcap.
5. Align hubcap gasket(s) and spacer if used. Install 6 cap screws and torque to 15 lbs. ft. (20 N•m) using X pattern. Do not use an air gun or over-tighten.
6. Place vent plug into center of window and snap in position.
7. Fill hubcap to proper level (between add and full) with wheel bearing lube (see Figure 23) as follows:
   A. Rotate hubcap until lube fill plug is on top (12 o'clock position).
   B. Remove fill plug and add bearing lube.
   C. Install fill plug and rotate wheel.
   D. Recheck the bearing lube fluid level with fill plug on top (12 o'clock position).
   E. Repeat the above steps until the proper fluid level is indicated.

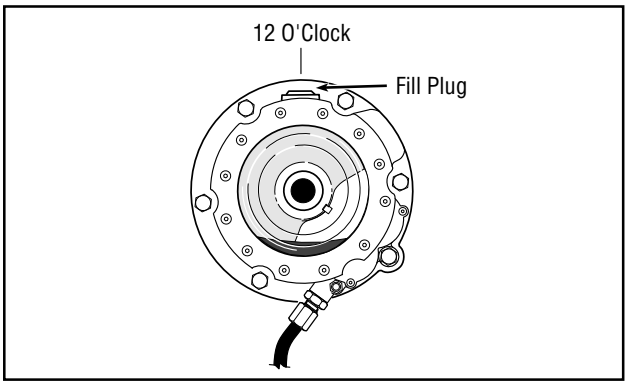

Figure 23 Add Lube Position and Check

Wheel and Wheel Valve

Note: Figure 19 shows front steer wheel air line connections for steer wheel applications. Use the illustration as a reference in completing the non-drive axle installation.

Note: Perform the following steps with the wheels off the ground to prevent the tires from losing bead seal.

1. Attach the male section of the adapter fitting to the wheel valve inlet port and torque to 16–19 lbs. ft. (22–26 N•m).
2. Apply a thin coating of lubricant to the male section of the adapter fitting and place the fitting into the receiver of the hubcap.
3. Secure the wheel valve to the hubcap with the wheel valve retaining bolt and torque to 15 lbs. ft. (20 N•m).
4. If wheel valve is to service a dual set of tires, prepare the wheel valve in the following manner.
   If only servicing a single tire proceed to step 9.

Caution: Follow Eaton recommended procedure for installation of fitting to assure the air filter is not damaged.

A. Lubricate O-ring.

B. Secure lock nut against the O-ring washer.

C. Install the tee into the valve until the O-ring is seated and the washer is against the face of the valve.

D. Back off lock nut.

E. Turn tee clockwise to orient fitting – no more than one turn.

F. Tighten lock nut 16–19 lbs. ft. (22–26 N•m).

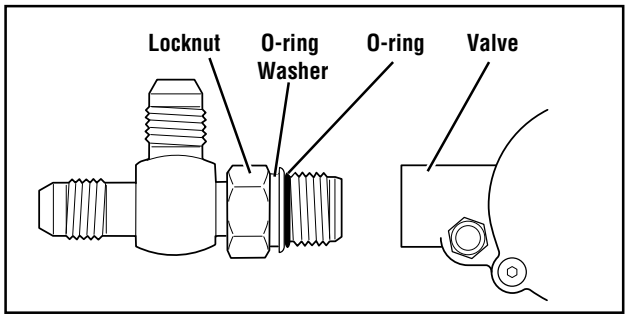

Figure 24 Run Tee

Note: Work quickly to minimize air loss during steps 5-10.

5. Remove valve stem core from inner tire and install hose end on valve stem.
6. Remove valve stem core from outer tire and install hose end on valve stem.
7. Install outer hose on run tee. Torque to 16–19 lbs. ft. (22–26 N•m).
8. Install inner hose on branch tee. Torque to 16–19 lbs. ft. (22–26 N•m).
9. On single tire only: lubricate O-ring then install tire hose on wheel valve. Torque to 16–19 lbs. ft. (22–26 N•m).
10. Remove valve stem core from tire and install hose end on valve stem.

Note: When repairs on Wheel Valve have been completed, the servicing technician should assure proper system function before putting vehicle back in service. As a minimum, the system should be inflated using the operator control panel to achieve the highway loaded setting and then deflated until the off-highway loaded setting is achieved.

Caution: The Eaton Tire Pressure Control System has the ability to maximize the vehicle's equipment and conditions. Replacement of components may temporally change to levels lower than you expect before the system adjusts to the changes. Therefore, the following procedure is necessary before returning the vehicle to service.

Wheel Changing Procedure

Note: Perform the following procedure with the wheels off the ground to prevent the tires from losing bead seal. Refer to Figure 19.

Preparation

To ensure your safety, perform the following steps before doing any service that requires removal of tires and wheels.

1. Set the brakes and block the wheels to prevent vehicle movement.
2. Raise the non-drive axle and support with a jackstand of adequate capacity.

Warning: Never work on a vehicle supported only by a jack.

Wheel Installation

Mount the wheel and follow the Wheel End Air Line Installation procedures earlier in this section.

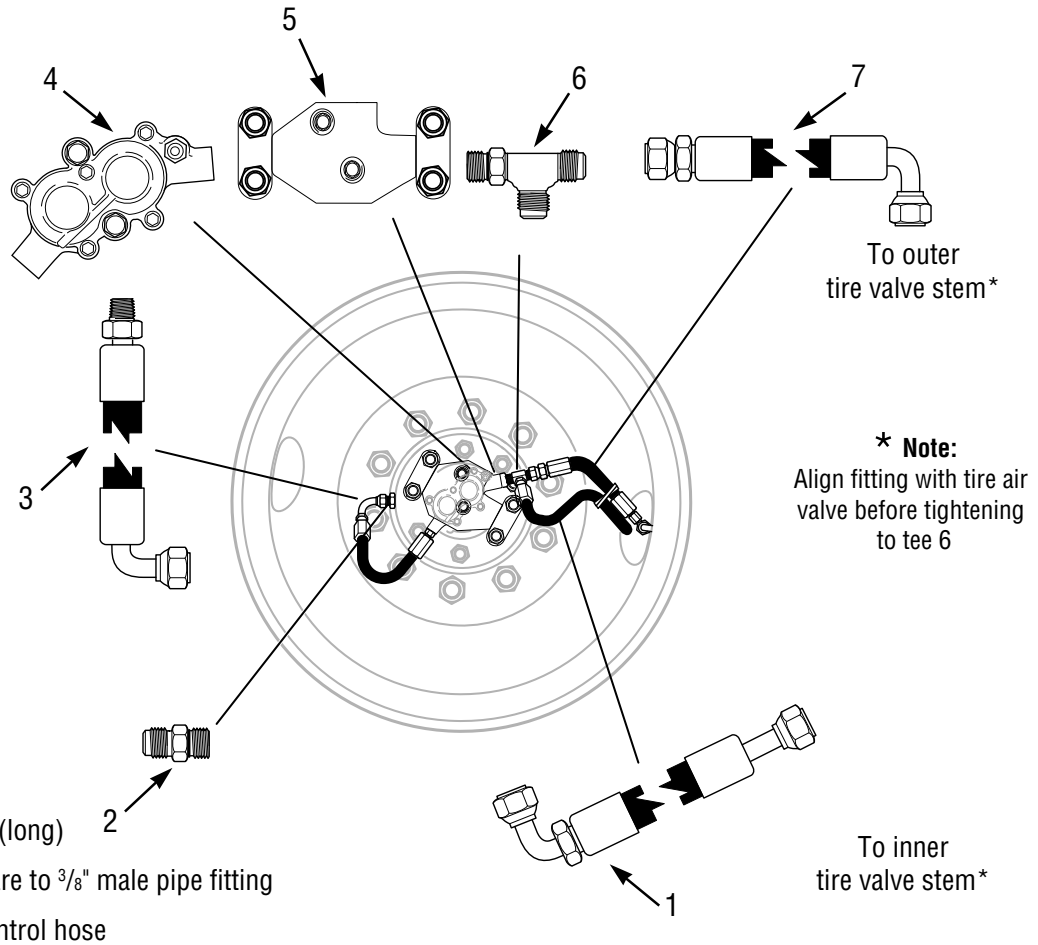

1. Inner tire hose (long)
2. 3/8" male 37° flare to 3/8" male pipe fitting
3. Wheel valve control hose
4. Wheel valve
5. Wheel valve mounting bracket
6. 3/8" male 37° flare run tee, 9/16–18 straight thread O-ring on the run
7. Outer tire hose (short)

Figure 25 Drive Wheel Air Line Routing

Preparation

To ensure your safety, perform the following steps before doing any service that requires removal of tires and wheels.

1. Block wheels properly.
2. Raise the drive axle and support with jack stands of adequate capacity.

Warning: Never work under a vehicle supported only by a jack.

Wheel and Wheel Valve Removal

Note: Figure 25 is a detailed view of the external air line connections on a rear drive wheel. **This filter must be replaced whenever the tire or wheel valve is serviced.**

Note: Perform the following steps with the wheels off the ground to prevent the tires from losing bead seal.

Important: Mark the alignment of the tire valve stem to the hub.

Remove wheel valve as follows:

1. Remove the control hose from wheel valve to the hub. Plug the air outlet in the hub to prevent contaminants from entering the system.
2. Disconnect the tire hose from the wheel valve tee and plug or cap with the appropriate fitting.
3. Remove two bolts attaching wheel valve to bracket, and remove wheel valve.
4. Remove wheels and brake drum if required.

Note: It may be required to back off slack to allow removal of the brake drum.

Hub, Oil Seal and Air Seal Removal

Note: The brake shoes and drum can now be serviced in the same manner as standard, non-Tire Pressure Control System assemblies.

Wheel End Disassembly

Note: The following procedures cover the removal of one drive axle wheel end. Repeat these steps for each wheel end for the level of repair needed.

1. Remove the following parts:
   - Axle shaft (See Figure 26).
   - Jam nuts, spindle washer, and outer bearing (See Figure 27).
   - Wheel hub (See Figure 27).
   - Oil Seal (See Figure 28).
   - Inner bearing (See Figure 27).
   - Air Seal (See Figure 27).

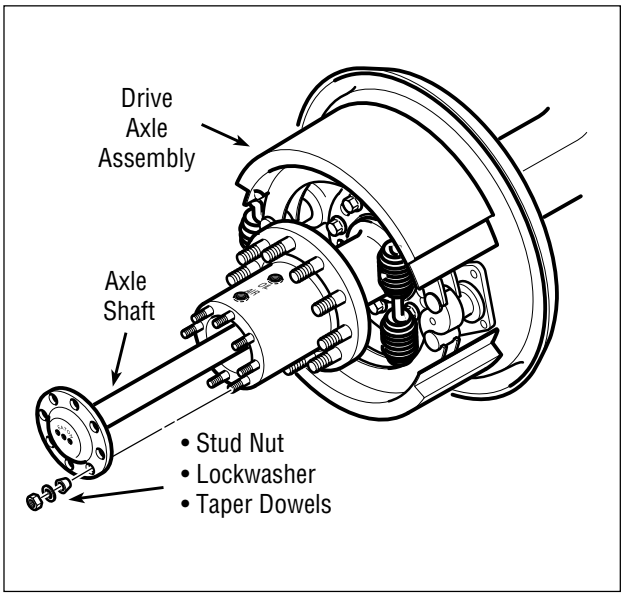

Figure 26 Axle Shaft Removal

2. Thoroughly clean all non-elastomer parts.
3. Inspect the following for scoring, damage and excessive wear:
   - Tire Pressure Control System sleeve
   - Spindle
   - Axle housing

If scoring is excessive or wear causes loose bearing fit on sleeve or spindle, replace sleeve or axle housing as required. Refer to sleeve removal in this section for axle housing sleeve replacement.

4. Inspect and repair brake system to manufacturer's specifications before installing air seal equipment.

Sleeve Removal

Perform the following steps using the Drive Axle Sleeve Puller. See Figure 27.

1. Disconnect inlet tube assembly.
2. Install Drive Axle Sleeve removal tool on spindle and align with end of sleeve.
3. Hook the puller jaws around the Drive Axle Sleeve.
4. Hold the drive sleeve removal tool against the base plate.
5. Apply pressure until the sleeve is removed.

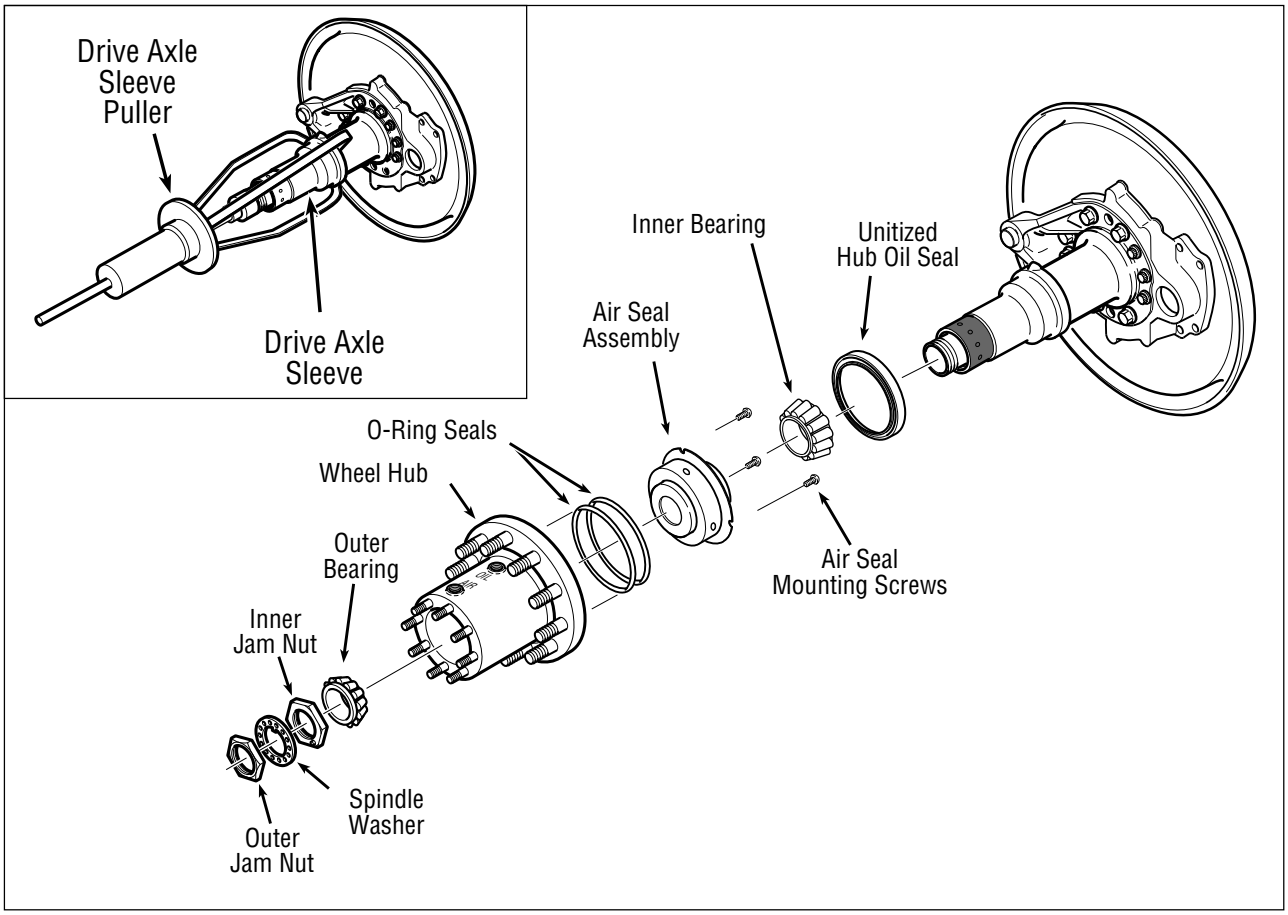

Figure 27 Wheel Hub Removal

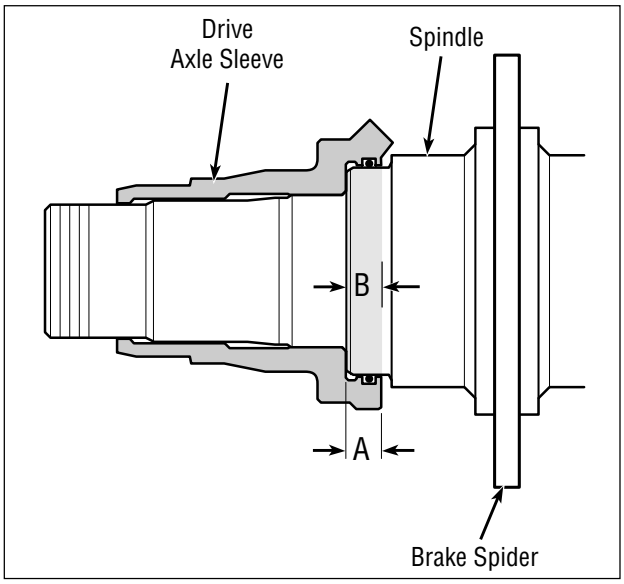

Figure 28 Spindle Sleeve Depth Measurement

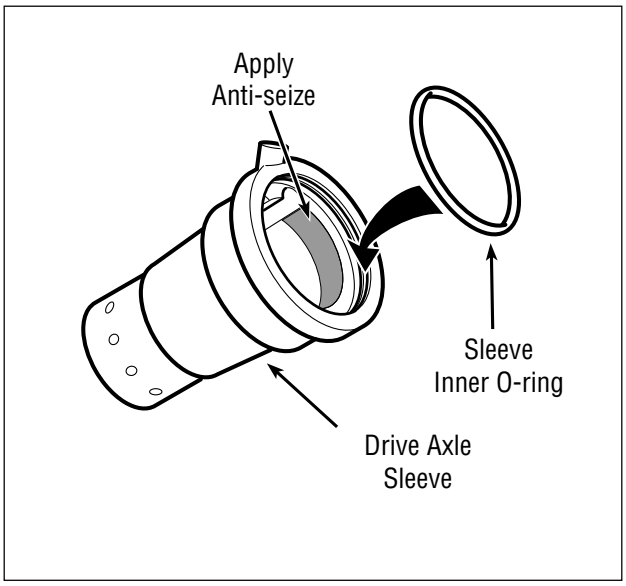

Figure 29 Sleeve Inner O-Ring Installation

Sleeve Installation

1. Measure the depth of the first step in spindle sleeve to +/– .001". (See Figure 28, dimension “A”) Measure out this distance on the axle spindle’s oil seal area. (See Figure 28, dimension “B”.) Mark this point on spindle.
2. Apply an anti-seizing compound to the sleeve as shown. See Figure 29.
3. Apply lubricant to the sleeve inner O-ring and install in groove in large diameter end of sleeve. See Figure 30.

Caution: Do not allow anti-seize to get into air passages.

4. Apply grease to the inboard sealing surface of the axle spindle. See Figure 30.
5. Position the sleeve on the axle spindle, making sure to align the input air port of the sleeve with the Tire Pressure Control System air line access hole on the brake flange and spider. See Figure 32.
6. Attach the sleeve installation fixture to the brake spider as follows:
   - Install base plate to four threaded rods and against welded locating nuts. Secure with flat washers and nuts. See Figure 32.
   - Align four threaded rods with holes in brake spider and install. See Figure 32. Secure with flat washers and nuts.
7. Press the sleeve onto the axle spindle as follows: See Figure 32.
   - Install mounting cup on spindle and align with end of sleeve.
   - Hold the bottle jack against the base plate and pump until jack head engages the other end of the installation tube.
   - Extend jack until sleeve is bottomed on axle spindle.

Caution: Be sure that the inside end of spindle sleeve is installed far enough to meet mark put on spindle in step 1.

   - Retract bottle jack and remove sleeve installation fixture.
8. Lubricate and install O-ring and backup ring into drive axle sleeve as shown in Figure 31.

Note: Position O-ring and backup ring on spindle. Use outer bearing and hand pressure to press them into position.

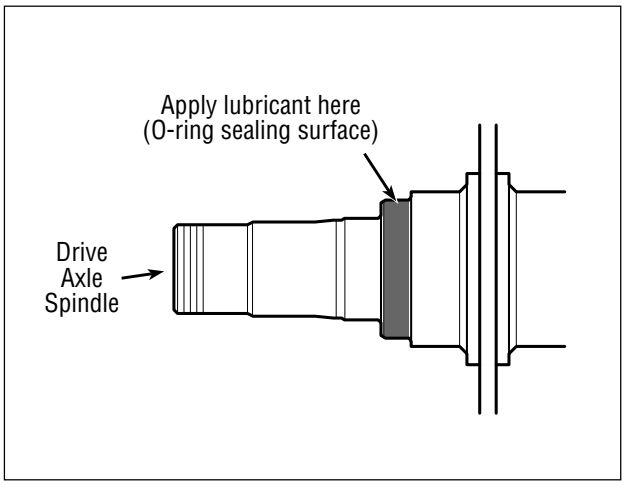

Figure 30 Spindle Preparation

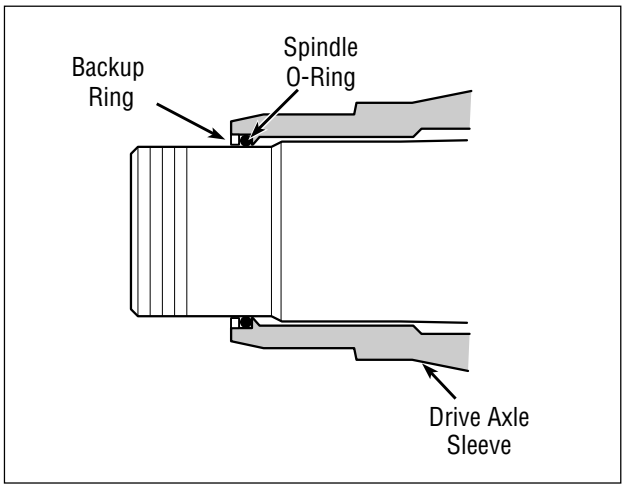

Figure 31 Spindle O-Ring and Backup Ring

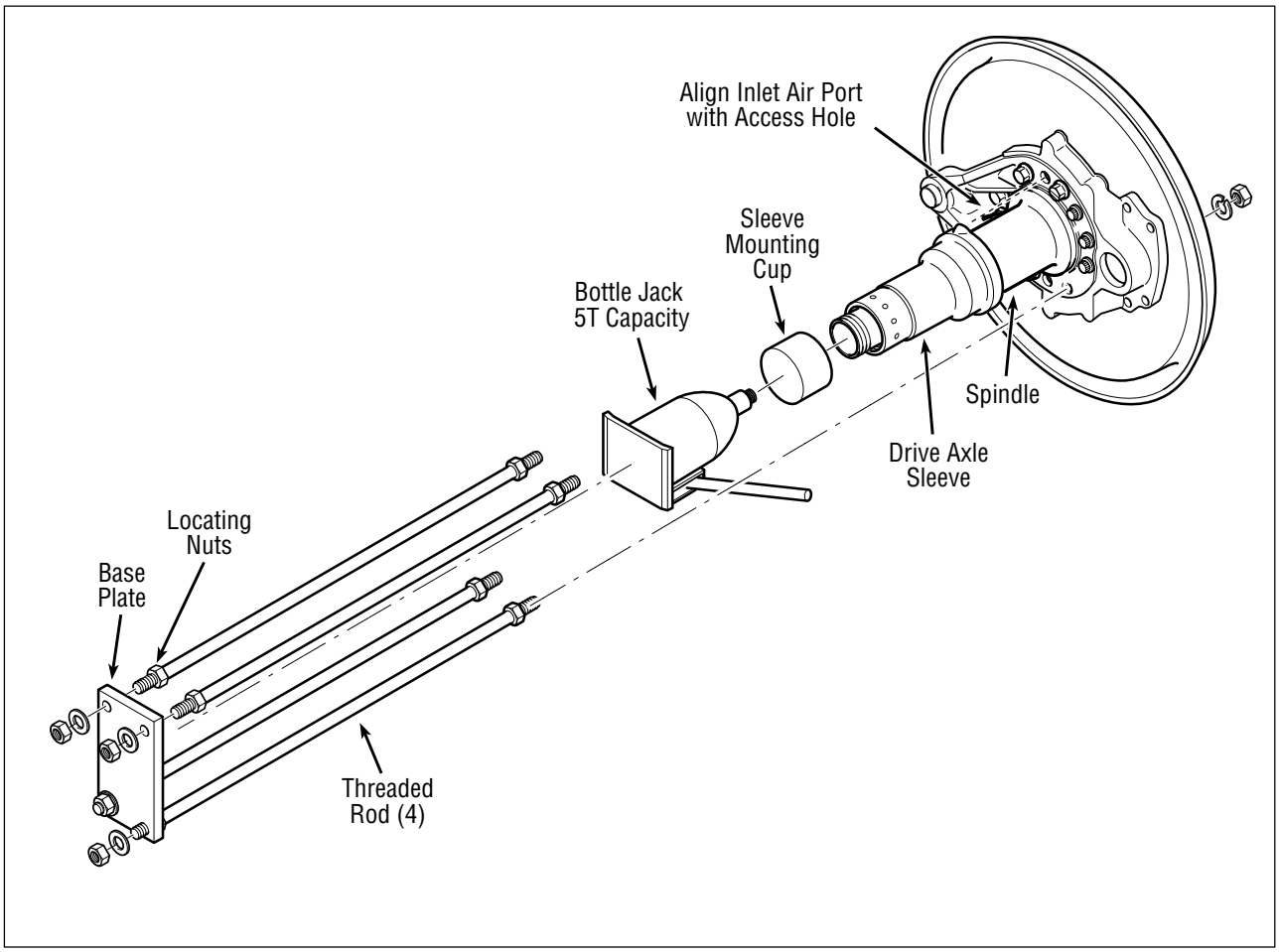

Figure 32 Preparation for Sleeve Installation

Install Drive Axle Inlet Tube

1. Install pipe end of 3/8" male NPT to 3/8" flareless tube end, 45° elbow.
2. Position tube end toward opening of brake flange. Feed drive axle inlet tube through brake flange hole and insert into the tube end of the fitting. The tube must bottom out in fitting
3. Manually screw nut onto fitting body until finger tight.
4. Make reference mark on nut and tube and tighten nut an additional 1 3/4 turns.
5. Loosen nut and inspect for proper preset.

Note: A ridge of metal has been raised above the tube surface, to a height of at least 50% of the thickness of the ferrule's leading edge, completely around the tube. Avoid rotating the ferrule.

Retightening Sequence

If the fitting body was used for ferrule pre-set, retighten the nut to the same fitting body used earlier in the pre-set.

Air Seal Installation

1. Pre-lube the two hub inner O-rings and install in wheel hub. (See Figure 33.)
2. Install three alignment pins in hub. Alignment pins can be made of three 8/32 x 1 1/2" screws with heads removed.
3. Position the air seal assembly (with protective guard) in hub and press into place until the flange is seated against the hub.
   - Remove pins.
   - Apply removable thread locking compound to the mounting bolt threads.
   - Install the three 8/32 mounting bolts.
4. Pre-lube the inner bearing with the same lubricant used in the axle sump. Place the inner bearing in the wheel hub.

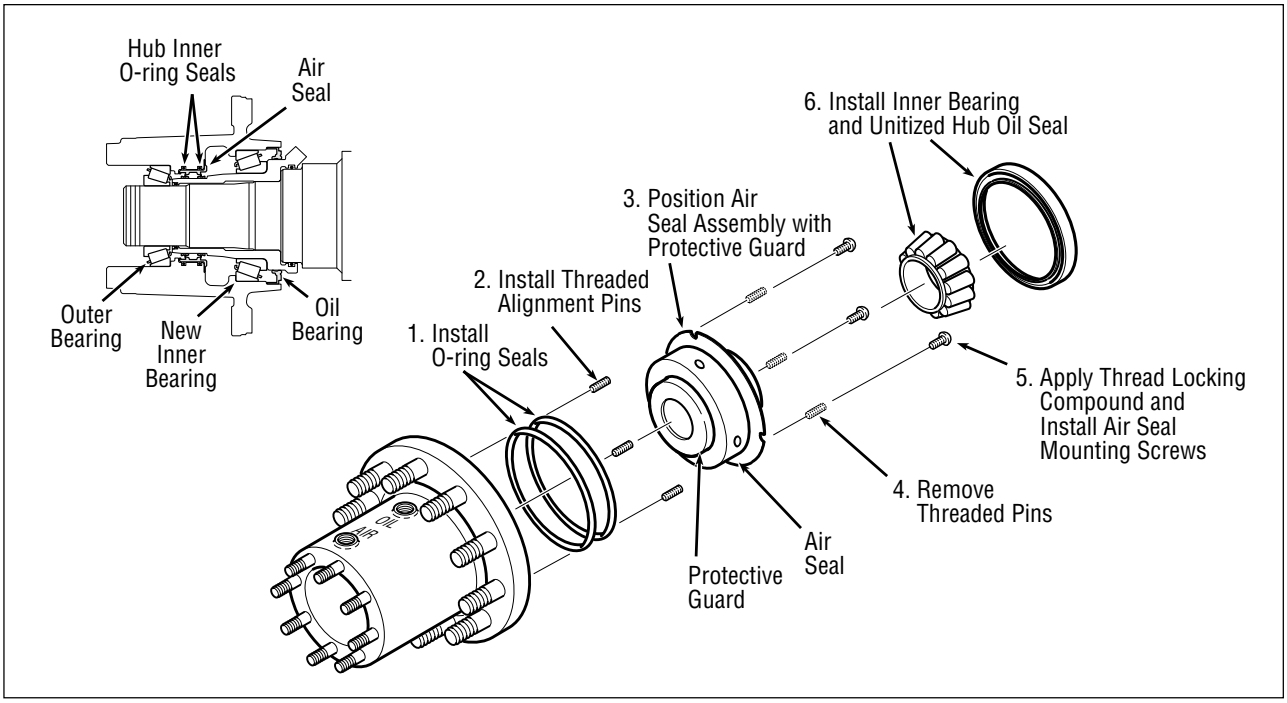

Figure 33 Wheel Hub Preparation for Installation

Oil Seal Installation

Using the following tools, install the oil seal in the wheel hub. (See Figure 32.)

- Seal Plate
- Bearing Centering Tool
- Handle Assembly

Caution: Do not hammer directly on the seal!

Wheel Hub Installation

See Figure 33

Caution: Make sure protective guard is installed in air seal before hub is installed on drive axle sleeve.

1. Apply thin coat of Shell® Aeroshell GR22 or equivalent to the portion of the sleeve where the air seal runs.

Caution: Use care when applying thin coat of Aeroshell. Make sure not to plug air passages with lubricant.

2. While insuring that the spindle end will pass through the air seal protective guard, slide hub into position on the spindle and sleeve with one push.
   - As the hub is installed, the air seal protective guard will be pushed out. Remove the air seal protective guard.

Caution: Do not pull the hub in and out or rock to install. This will cause damage to the air seal.

3. If the hub does not install with the initial push, remove hub from spindle and reposition the air seal protective guard from the inner bearing side only. Repeat step 2 for installation.

Note: During installation it may be necessary to use a screwdriver to align inner bearing with the drive sleeve bearing journal. Be careful not to damage oil seal.

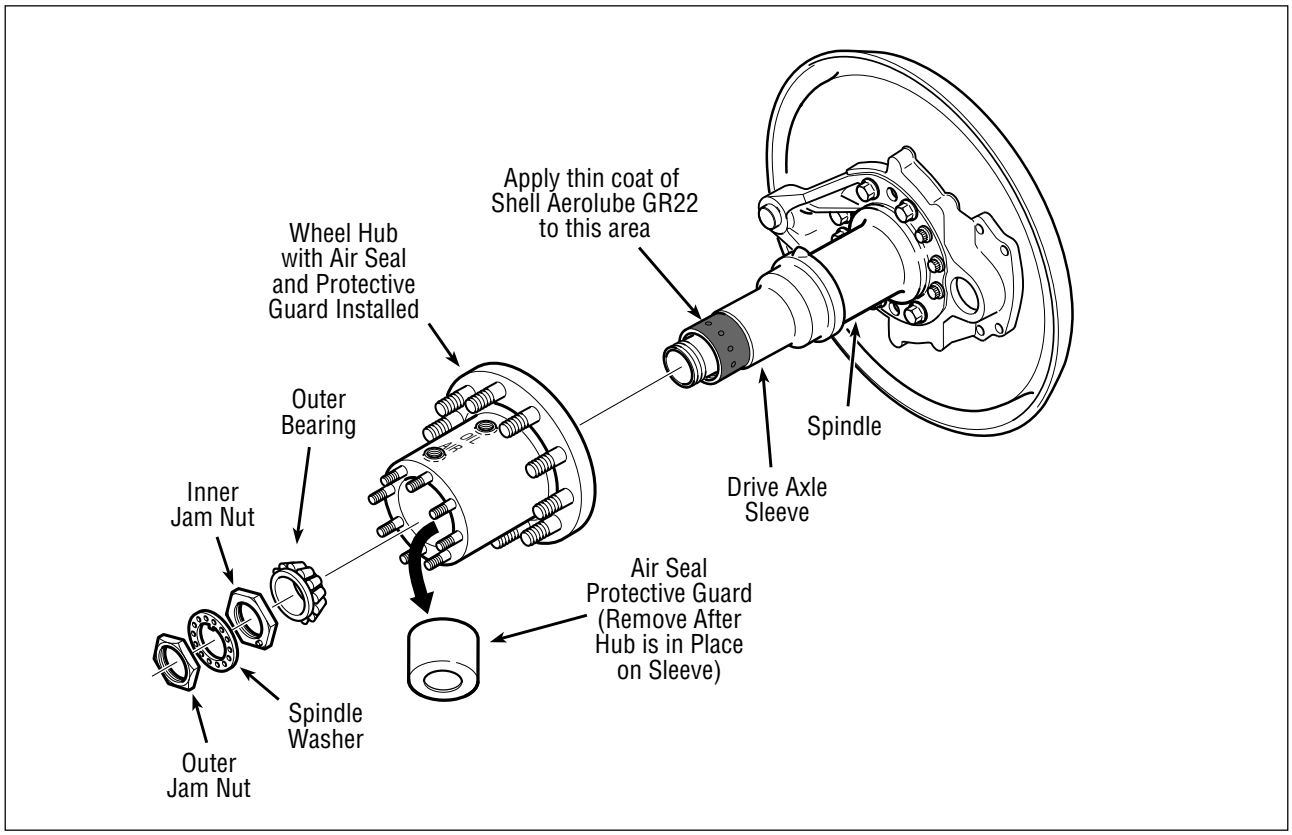

Figure 34 Wheel Hub Installation

4. Before installation, lubricate the outer bearing with the same lubricant used in the axle sump.

Note: Lubricate only with clean axle lubricant of the same type used in the axle sump. Do not pack the bearings with grease before installation. Grease will prevent the proper circulation of axle lubricant and may cause wheel seal failure.

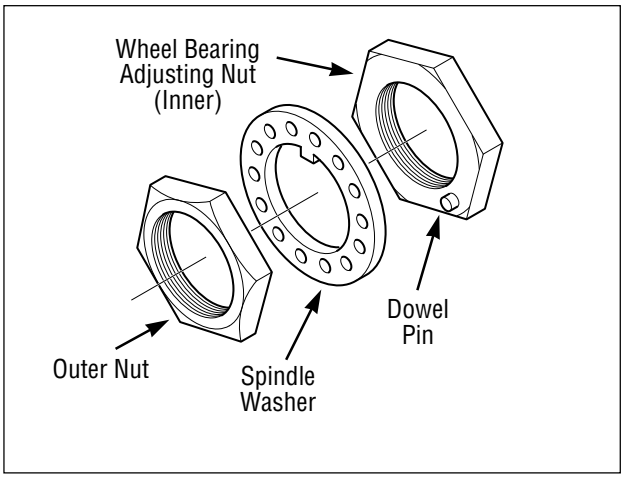

Figure 35 Adjusting Nut Identification

5. Install the outer bearing on the spindle.
6. Install the inner nut on the spindle and adjust as follows:
   - Torque the inner nut to 200 lb. ft. (272 N•m) while rotating the hub.
   - Loosen the inner nut one full turn.
   - Re-torque to 50 lb. ft. (68 N•m) while rotating hub.
   - Back the nut off 1/4 turn.
7. Install the spindle washer. See Figure 35.
   - If the dowel pin and washer are not aligned, remove washer, turn it over and reinstall. If required, ***loosen*** the inner nut just enough for alignment.

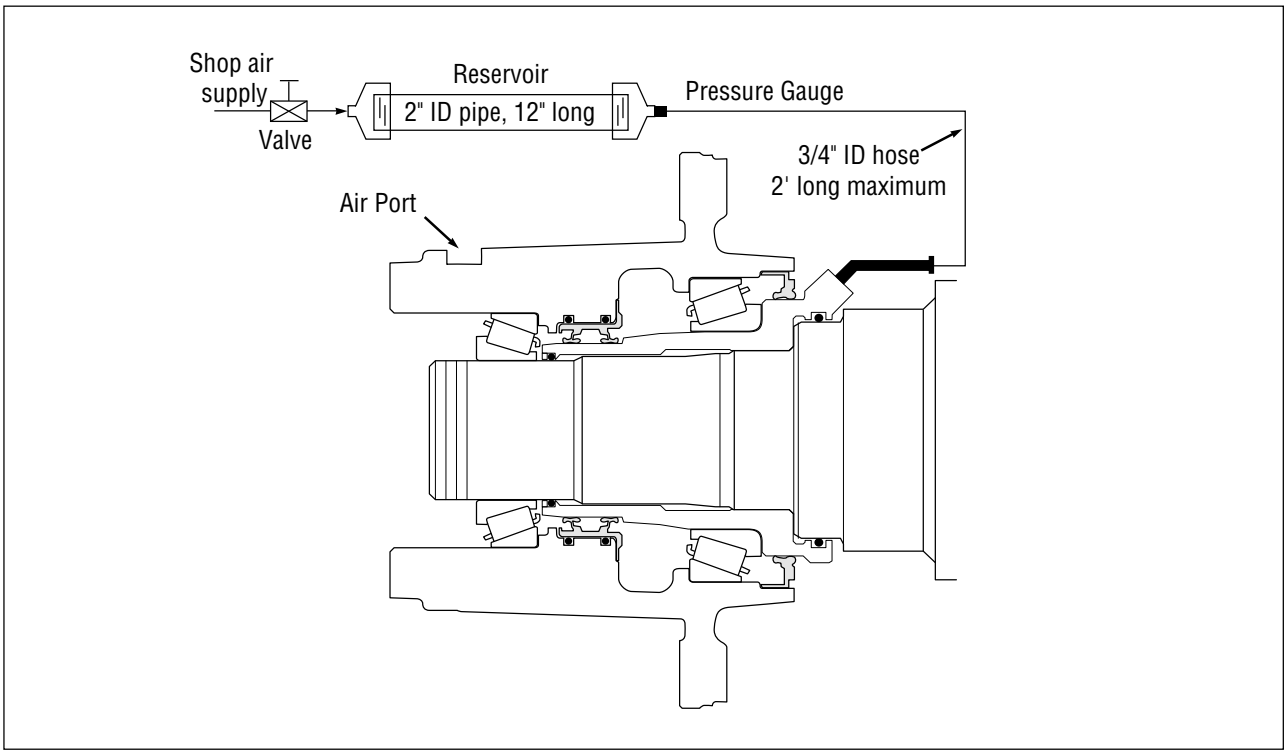

Figure 36 Sleeve O-Ring Leak Test

Caution: Never tighten the inner nut for alignment. This will preload the bearing and cause premature failure.

8. Install the outer nut on the spindle and torque as follows:
   - Dowel-type washer lock – 300 lbs. ft. (408 N•m)
   - Tang-type washer lock – 250 lbs. ft. (229 N•m)

Note: This adjustment procedure allows the wheel to rotate freely with 0.001" to 0.005" (0.025 mm to 0.125 mm) end-play.

9. Measure end-play using a dial indicator with a 0.001" resolution.
10. Repeat wheel bearing adjustment procedure if end-play is not within specification.
    - Disassemble and inspect the components. Replace defective parts and re-assemble.
11. Perform an air pressure check (before oil fill) as follows (see Figure 36):
    - Connect the hose from the 40 in^3 pressure reservoir (2" ID x 12" long with 2' max 3/8" hose) to the inlet tube via the male #6 37° flare.
    - Plug hub air port with a 3/8" pipe plug.
    - Open the valve from the air supply line and stabilize the pressure in the reservoir to 100 ± 5 psig.
    - Close air supply valve. Rotate the hub assembly while monitoring the pressure gauge. The pressure reading should not drop more than 5 psig in 20 seconds.

Note: If the air leakage exceeds the rate listed previously in step 11, the hub may need to be rotated several times to insure a complete pressure seal.

12. Install axle shaft as follows:
    - Place a new gasket on the hub.
    - Install the axle shaft.
    - Install axle flange tapered bushings (if required).
    - Install washers and nuts and tighten to specific torque.
13. Add two pints of lube to hub at “OIL” fill hole. Do not lube wheel ends by tilting axle.
14. Install oil fill plug in “OIL” hole on hub and tighten to 20-30 lbs. ft. (27-40.6 N•m).

Wheel and Wheel Valve

Figure 37 is a detailed view of the external air line connections on a rear drive wheel.

Note: Perform the following steps with the wheels off the ground to prevent the tires from losing bead seal.

Install drive axle wheel end pneumatics as follows:

1. Mount inside and outside drive wheels so that both valve stems are positioned together and 180° from the axle hub air fitting. Feed inner tire hose out through wheel edge opening. Position hoses so they will connect easily to wheel valve as shown in Figure 38. Double check hose alignment.
2. Select two hub mounting studs that will position wheel valve outlet port 180° from the axle hub air fitting as shown in Figure 37. Remove the nuts and lockwashers on the selected hub studs. Install the wheel valve mounting bracket and replace the hub lockwashers and nuts.
3. Set wheel valve within mounting bracket and fasten to the wheel valve mounting bracket using 3/8" x 1" hex head bolts.

Note: Replace the air filter in wheel valve when the tire or wheel valve is serviced. See Figure 37.

4. Prepare the wheel valve and hoses in the following manner to minimize air loss from the tire when reinstalling tire hoses.
   A. Lubricate O-ring.
   B. Secure lock nut against the O-ring washer.
   C. Install the tee into the valve until the O-ring is seated and the washer is against the face of the valve.
   D. Back off lock nut.
   E. Turn tee clockwise to orient fitting – no more than one turn.
   F. Tighten lock nut 16–19 lbs. ft. (22–26 N•m).

Note: Work quickly to minimize air loss during steps 5-8.

5. Remove valve stem core from inner tire, install hose end on valve stem.
6. Remove valve stem core from outer tire, install hose end on valve stem.
7. Install outer hose on run tee. Torque to 16–19 lbs. ft. (22–26 N•m)
8. Install inner hose on branch tee. Torque to 16–19 lbs. ft. (22–26 N•m)

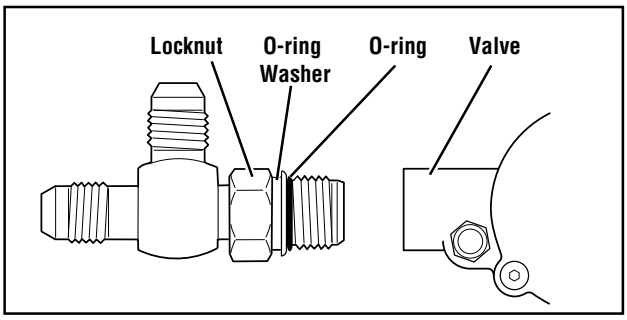

Figure 37 Run Tee

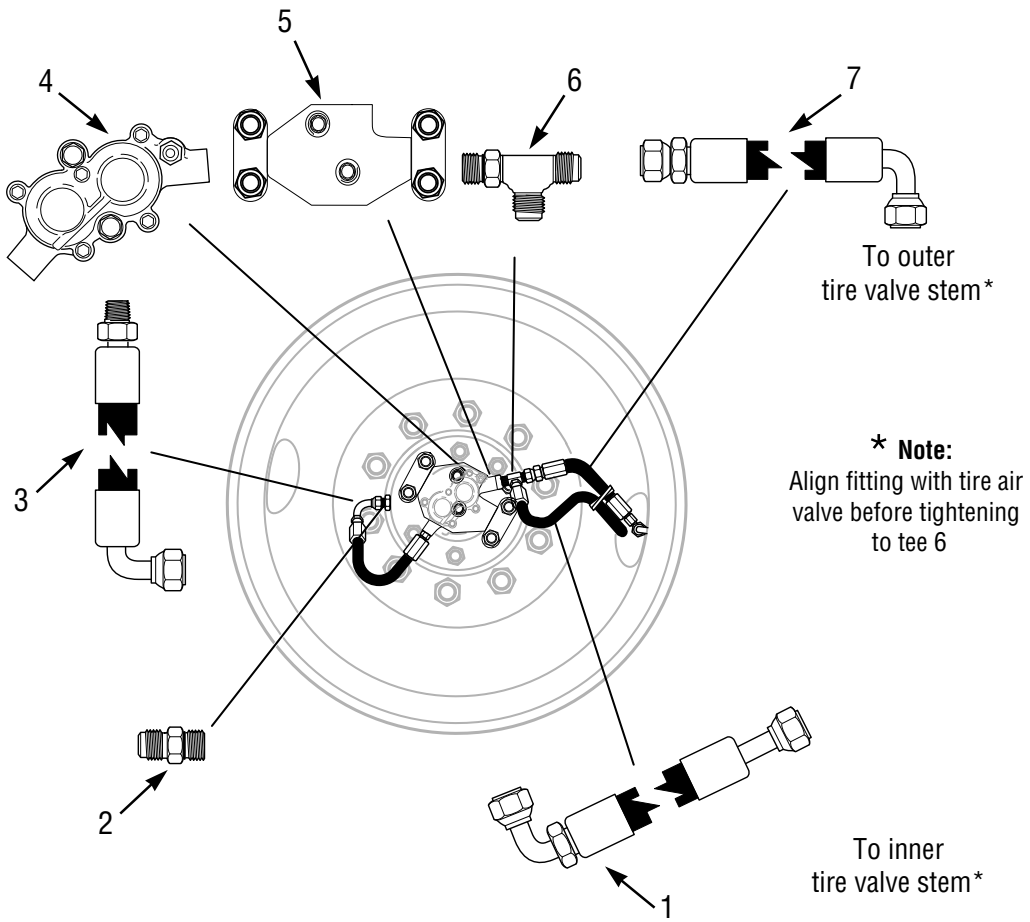

1. Inner tire hose (long)
2. 3/8" male 37° flare to 3/8" male pipe fitting
3. Wheel valve control hose
4. Wheel valve
5. Wheel valve mounting bracket
6. 3/8" male 37° flare run tee, 9/16"–18 straight thread O-ring on the run
7. Outer tire hose (short)

Figure 38 Drive Axle Wheel Air Line Routing

Introduction

The chart below contains typical Tire Pressure Control System settings. These settings may be changed by using the Operator Control Panel to program the system as described in Programming Tire Pressure Control System in this section.

	Steer	Drive	Trailer	Speed
Highway Loaded	90	90	90	65
Highway Un-loaded	80	60	60	65
Off-highway Loaded	75	50	50	35
Off-highway Un-loaded	75	28	28	35
Emergency Loaded	50	30	30	5
Emergency Un-loaded	40	25	25	5

System Setup

Normal service procedures (removal of valve stem and installation of air hoses) will cause the tires to be unevenly under-inflated. This may result in a fault code on power up. If fault is encountered, press run flat button to continue.

Note: Inflation times are a function of compressor capacity. It may be desirable to plumb clean, dry (125 psi regulated) shop air into the wet tank to perform these tests without running the engine; or run engine at a fast idle to decrease the inflation time.

Note: In low tire pressure conditions (under 40 psi) a pressure variation of a few pounds is normal. The displayed pressure will typically indicate the lowest tire pressure observed.

1. Connect vehicle to (125 psi regulated) shop compressed air supply if it is available. Select the Highway Loaded condition. Bringing tires to their highest pressure mode first is necessary to ensure proper tire equalization prior to tire deflation. During system inflation, check each channel individually for air leaks. Perform any necessary repairs to system.

Note: System channels are only pressurized when in the process of inflating a particular channel.

2. During inflation, check all tire hose connections with soapy water or leak detector. If air leaks are detected, repair before continuing.
3. Select emergency loaded condition and allow system time to deflate. When the system is stabilized, verify actual tire pressure at all wheel valves and compare to indicated pressure on the Operator Control Panel.
4. Proceed to off-highway loaded condition and verify actual tire pressures.
5. Proceed to highway loaded condition and verify tire pressures.

Note: When repairs to the Pneumatic Controller have been completed, the servicing technician should assure proper system function before putting vehicle back in service. As a minimum, the system should be inflated using the Operator Control Panel to achieve the highway loaded setting, and the deflated until the off-highway loaded setting is achieved.

Caution: The Eaton Tire Pressure Control System has the ability to maximize the vehicle's equipment and conditions. Replacement of components may temporally change to levels lower than you expect before the system adjusts to the changes. Therefore, the above procedure is necessary before returning the vehicle to service.

Introduction

The dash-mounted Operator Control Panel is the sole interface for display of operator information and for key entry of system instructions. Figure 39 shows the Operator Control Panel. The following sections explain the purpose and operation of all Operator Control Panel features.

Warning Icons

The two warning icons report operating problems. You must take immediate action to either reduce vehicle speed or check tire condition.

Reduce Vehicle Speed – This signal reports that the vehicle speed is too fast for the pressure selected. You must either reduce speed or select a higher pressure by pressing the appropriate key. Continued operation in this mode will result in the system automatically selecting a more appropriate pressure setting.

Check Tire Condition – This signal reports that one tire is at a significantly lower pressure than the others and could indicate that a tire is not holding pressure. The operator should immediately stop the vehicle and identify the extent of tire damage. The system may be used to re-inflate the low tire if damage is determined to be minimal (e.g., a minor puncture or slow leak) by selecting "RUN FLAT." **The system should not be used to inflate tires with more substantial damage such as large cuts, chunk outs, or structural defects.**

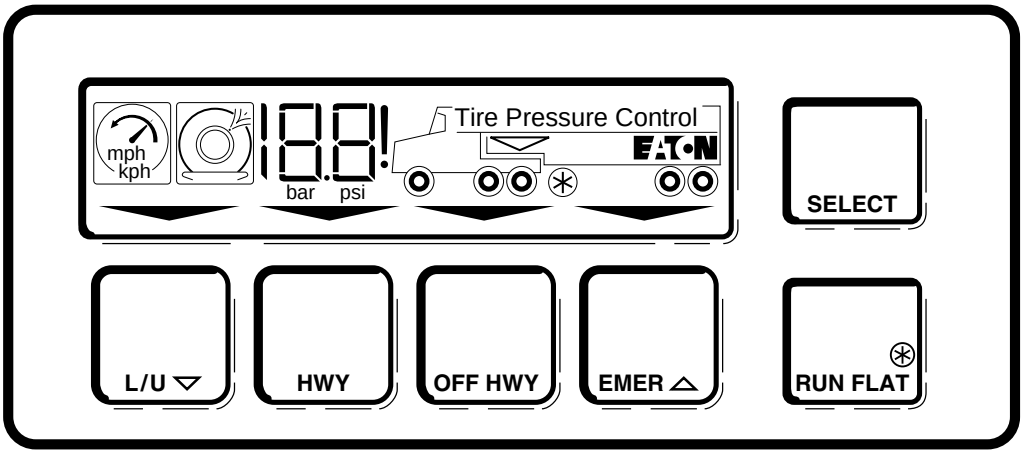

Figure 39 Operator Control Panel

Fault Codes

When an exclamation point (!) follows the digital display, the display is reporting a system fault. The following chart provides a brief overview of the Tire Pressure Control System fault codes and the affected system.

Fault Code	Code Type	System Status	Fault Cause
1C!	Power	No operation Normal operation	Low power No power down
2C!	—	—	Not assigned
3C!	Speed sensor	Inflate only	Bad connection or no speed signal
4C!	Control communication	Inflate only	Bad connection from Electronic Control Unit to Operator Control Panel
5C!	Pressure transducer	No operation	No pressure transducer reading Too high pressure transducer reading
6C!	—	—	Not assigned
7C!	Steer solenoid	No operation	Solenoid does not pass electrical diagnostics
8C!	Drive solenoid	No operation	Solenoid does not pass electrical diagnostics
9C!	Trailer solenoid	No operation	Solenoid does not pass electrical diagnostics
10C!	Supply solenoid	No operation	Solenoid does not pass electrical diagnostics
11C!	Deflate solenoid	No operation	Solenoid does not Pass electrical diagnostics
12C!	Control solenoid	No operation	Solenoid does not pass electrical diagnostics
13C!	Relay	No operation	Relay open or shorted
1P!	No deflate signal	Inflate only	No vacuum at Pneumatic Control Unit or in control line
2P!	—	—	Not assigned
3P!	Vacuum fault	No operation	Unintentional vacuum
4P!	Channel between modes	Pressure check only	Slow inflate or deflate
5P!	Pressure read low	Pressure check only	Quick loss of pressure
6P!	—	—	Not assigned
7P!	Inadequate air pressure	Pressure check only	High pressure switch does not close Wet tank pressure does not rise
8P!	Atmospheric	Pressure check only	Vent pressure is outside range
9P!	Trend fault	Channel inoperative	Channel loses pressure in inflate mode
10P!	Tire leak (confirm)	Channel inoperative	Channel fails to confirm
11P!	Tire leak (imbalance)	Channel inoperative	One tire pressure lower than others

***Note:** Refer to Troubleshooting Guide AXTS-0010 for more detailed description of codes.

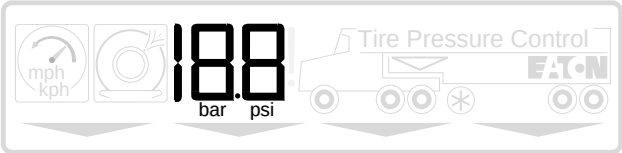

Digital Display

The display shows either tire pressure or fault codes for the channel indicated by the illuminated inner tire rings (see Channel Indicators). When the system is actively changing tire pressure on the selected channel, a "bubble" display in clockwise rotation indicates inflation and counterclockwise indicates deflation.

Fault Indication – The exclamation point indicates that the value shown in the digital display is not a pressure but rather a fault code. See Fault Codes Section.

Metric/English Indicator – This unit of measure indicator tells if the tire pressure is shown in metric (bar) or English (psi) units.

Mode Keys and Annunciator Arrows

These keys select pressures appropriate for different surface and loading conditions. The annunciator arrow points to the selected key and signals one of two states:

- If the arrow is flashing – the system is in the process of checking or changing pressures.
- If the arrow is lighted steady – the selected pressure has been achieved and the system is de-pressurized.

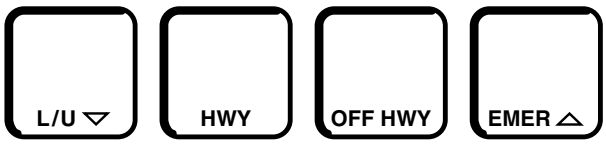

L/U Key (Loaded/Unloaded) – This key selects pressures appropriate for either a loaded or unloaded vehicle.

HWY – For high speed travel on paved surfaces.

OFF HWY – For operation on secondary roads.

EMER – For selection of extremely low tire pressures to help free a stuck vehicle. Operation in "EMER" mode for longer than 10 minutes will result in the system automatically selecting the OFF HWY mode and inflating the tires accordingly.

IMPORTANT: The EMER key is for extreme conditions only and should not be used for normal driving.

Loaded Indicator

The small arrow pointing to the drive wheels indicates whether you have selected loaded or unloaded pressures. You must select loaded if your vehicle is carrying any load.

Caution: Operating a loaded vehicle at unloaded tire pressures may result in tire overheating and reduced tire life or blowout.

Run Flat Indicator

This asterisk matches the symbol on the "Run Flat" key and it indicates that the Run Flat feature is selected.

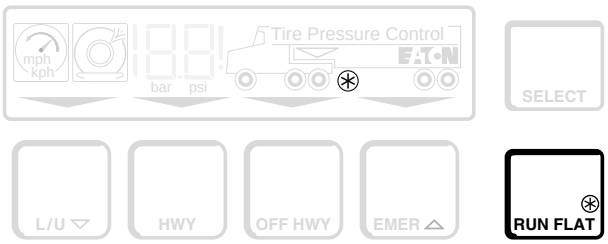

Run Flat Key

This key allows the operator to over-ride the 11P! (tire leak imbalance) fault. (See Check Tire Condition under Warning Icons in this section.) This key also instructs the system to check tire pressures at more frequent intervals. The “RUN FLAT” feature will automatically de-select after 10 minutes.

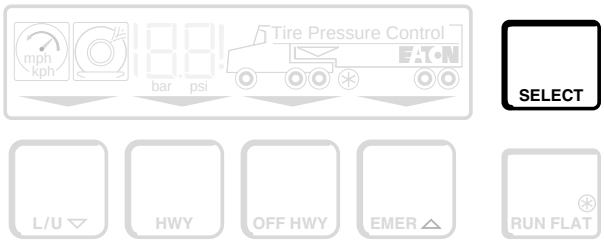

Select Key

This key allows the operator to continuously monitor one channel, or scan all of them. On power-up, the Operator Control Panel will not display any pressures (“Quiet Mode”). Pressing the select key once will cause the display to scan the tire pressures (see Channel Indicators). Repeated pressing will lock the display on each individual channel (so that any channel may be monitored continuously) and then return to the no display condition.

Note: All symbols on the display will light momentarily upon start of the vehicle.

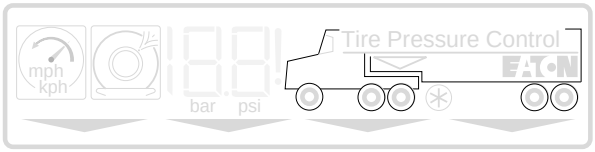

Configuration Indicators

The tractor/trailer outline show(s) whether the vehicle is configured with a two channel (tractor or straight truck) or three channel (tractor and trailer) Tire Pressure Control System.

Eaton Logomark

Indicates power on at vehicle start-up.

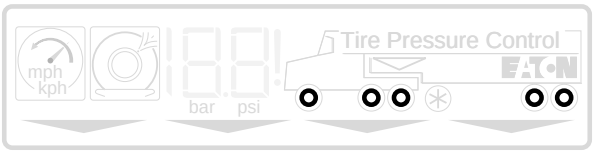

Channel Indicators

The rings inside the tires of the configuration indicators show which channel (steers, drives or trailers) is being reported by the digital display.

Tire Pressure Control System Programming

Eaton's Tire Pressure Control System features on location programming through the Operator Control Panel. Programmable settings include:

- Individual pressure settings for the steer, drive and trailer axles.
- Loaded and unloaded axle programming for highway, off highway and emergency conditions.
- Overspeed warning for highway, off highway or emergency conditions.

Enter the Tire Pressure Control System programming sequence by pressing the SELECT and L/U buttons at the same time. A flashing bar or psi verifies that you are in the programming mode and also indicates that the first selection, English or metric values, is ready for programming. Refer to Figure 40 for sample procedure.

Press up/down arrows to select options or change settings (pressure or speed) and press SELECT button to record a selection in memory and move to the next step.

Press the SELECT button repeatedly to move through the program steps, one step for each time the SELECT button is pressed. Refer to the programming reference chart for specific Tire Pressure Control System pressure and speed programming steps.

To complete the programming sequence, or exit the programming mode, continue to press SELECT button to step through to the end of the procedure.

Note: If no buttons are pressed for more than one minute, the Operator Control Panel will end the programming sequence, saving any changes made during programming.

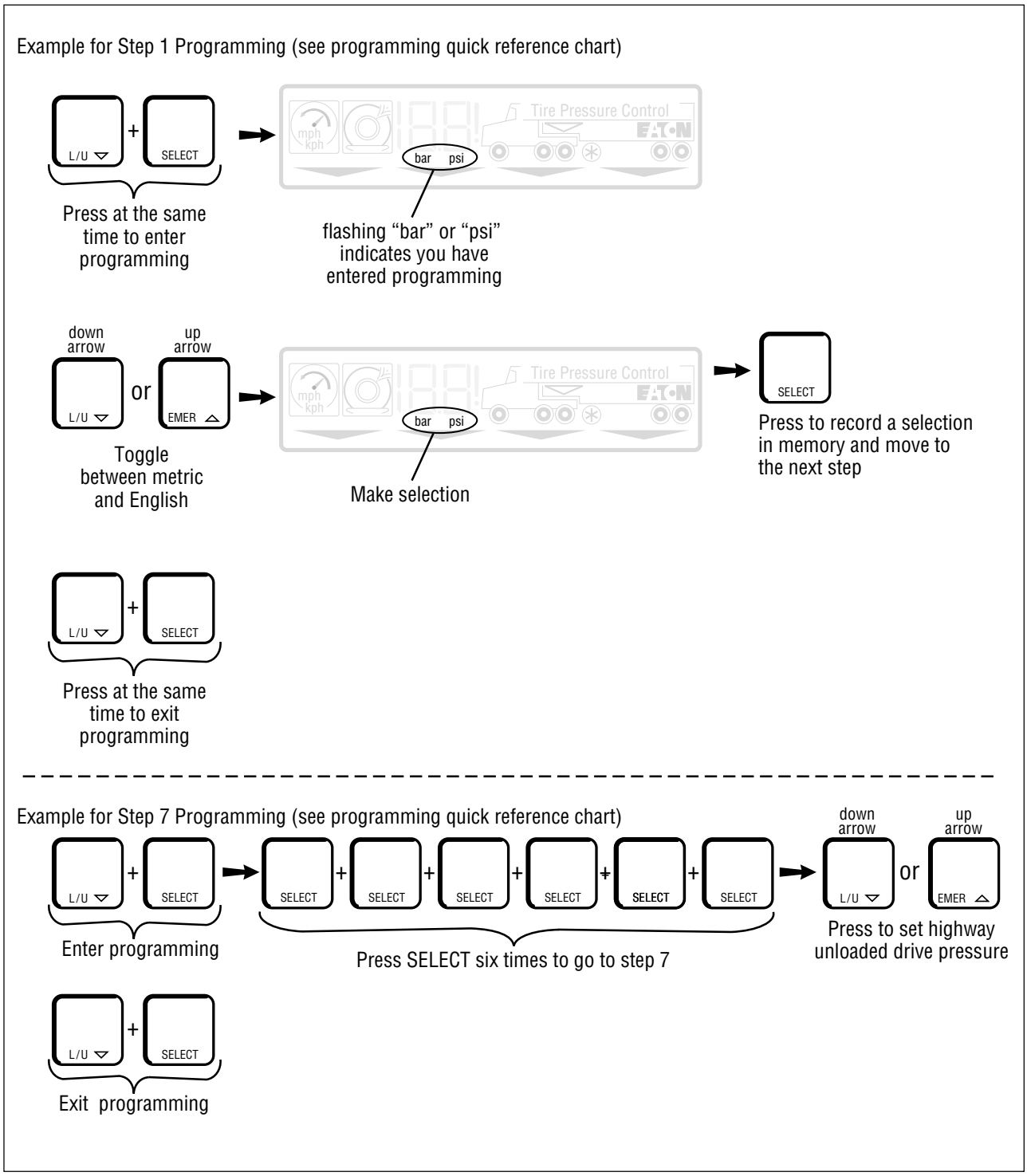

Figure 40 Entering the Programming Sequence

Programming Quick Reference Chart

Step	Setting	Metric English Indicator	Speed Indicator	Annunciator Arrows			Loaded Arrow	Channel Indicator		
				Hwy	Off Hwy	Emer		Steer	Drive	Trailer
1	Metric/English	On								
2	Highway Overspeed		On	On						
3	Highway Loaded Steer Pressure			On			On	On		
4	Highway Loaded Drive Pressure			On			On		On	
5	Highway Loaded Trailer Pressure			On			On			On
6	Highway Unloaded Steer Pressure			On				On		
7	Highway Unloaded Drive Pressure			On					On	
8	Highway Unloaded Trailer Pressure			On						On
9	Off-Highway Overspeed		On		On		On	On		
10	Off-Highway Loaded Steer Pressure				On		On		On	
11	Off-Highway Loaded Drive Pressure				On		On			On
12	Off-Highway Loaded Trailer Pressure				On			On		
13	Off-Highway Unloaded Steer Pressure				On				On	
14	Off-Highway Unloaded Drive Pressure				On					On
15	Off-Highway Unloaded Trailer Pressure				On					
16	Emergency Overspeed		On			On				
17	Emergency Loaded Steer Pressure					On	On	On		
18	Emergency Loaded Drive Pressure					On	On		On	
19	Emergency Loaded Trailer Pressure					On	On			On
20	Emergency Unloaded Steer Pressure					On		On		
21	Emergency Unloaded Drive Pressure					On			On	
22	Emergency Unloaded Trailer Pressure					On				On

Figure 41 Entering the Programming Sequence Chart

Fastener Torques		
Fastener	**lbs. ft.**	**N•m**
Oil Fill Plug – (drive hub)	20–30	26–40.6
Rotary Joint	31	42
Banjo Bolt	140–160 lbs. in.	15.8–18.1
Cap Screws (hubcap)	15	20
Wheel Valve Retaining Bolt	15	20
Locknut on Wheel Valve Run Tee	16–19	22–26
Inner/Outer Hose – to Tee	16–19	22–26
Control Hose – to Wheel Valve	16–19	22–26
Pressure Transducer	10–12	14–16
Cover Fasteners – Pneumatic Control Unit	35–45 lbs. in.	4–6
Wheel Bearing End Play – .001 to .005" (0.025 mm to 0.125 mm)		

Figure 42 Fastener Torques

Appendix A

Copyright Eaton and Dana Corporation, 2007. EATON AND DANA CORPORATION hereby grants its customers, vendors, or distributors permission to freely copy, reproduce and/or distribute this document in printed format. THIS INFORMATION IS NOT INTENDED FOR SALE OR RESALE, AND THIS NOTICE MUST REMAIN ON ALL COPIES.

National Institute for AUTOMOTIVE SERVICE EXCELLENCE

Roadranger®

DANA | EATON

For spec'ing or service assistance, call 1-800-826-HELP (4357) 24 hours a day, 7 days a week (Mexico: 001-800-826-4357), for more time on the road. Or visit our web site at www.roadranger.com.

Roadranger: Eaton, Dana and other trusted partners providing the best products and services in the industry, ensuring more time on the road.

©2007 Eaton Corporation and Dana Corporation
All rights reserved. Printed in USA · AXSM0010

Dana Corporation • Commercial Vehicle Systems • P.O. Box 4097 • Kalamazoo, MI 49003 • U.S.A.• www.roadranger.com